OLHS Technical Department

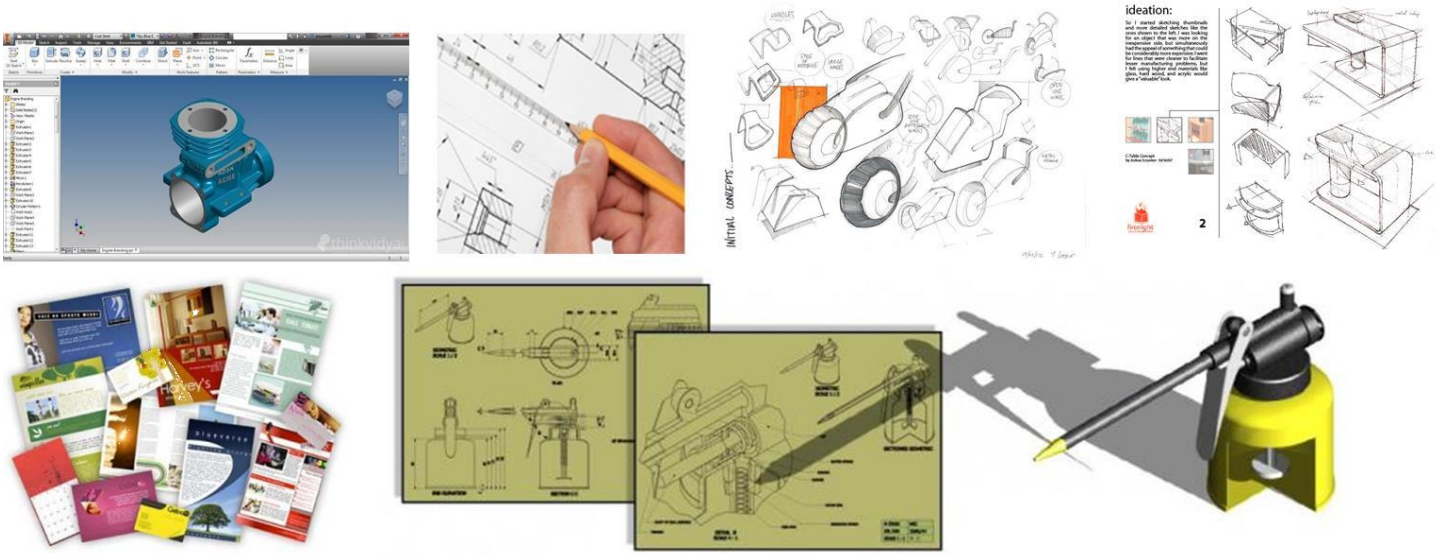

Homework Questions

N5

Name:	Teacher:	Class:

Homework	Date Due	Teachers Signature	Mark
1			
2			
3			
4			
5			
6			
7			
8			
9			
10			
11			
12			
13			
14			
15			

Homework	Date Due	Teachers Signature	Mark
16			
17			
18			
19			
20			
21			
22			
23			
24			
25			
26			
27			
28			
29			
30			

1. A variety of views of a child's wooden toy train are shown below.

Diagram 1a:

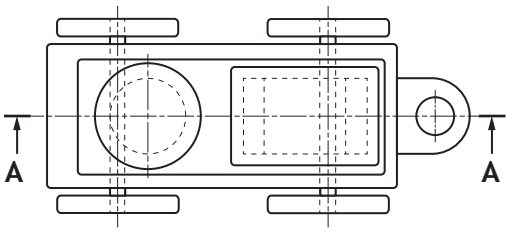

Plan

Diagram 1b:

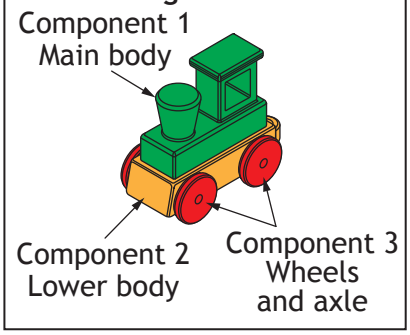

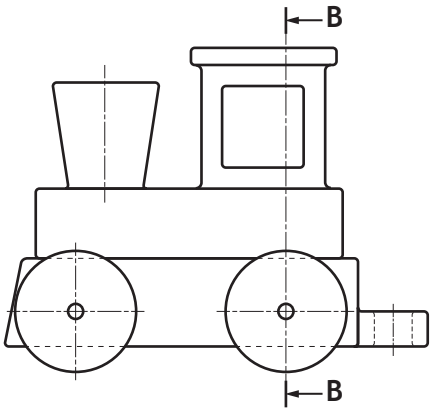

Elevation

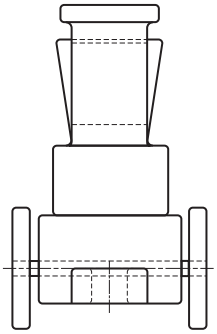

End Elevation

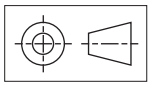

Symbol X

(a) State the name of the type of drawing shown in Diagram 1a. **1**

_____

(b) State the name of Symbol X in Diagram 1a. **1**

_____

(c) Describe the purpose of Symbol X. **1**

_____

1. (continued)

Four potential Sectional Elevations of the toy train views are shown below.

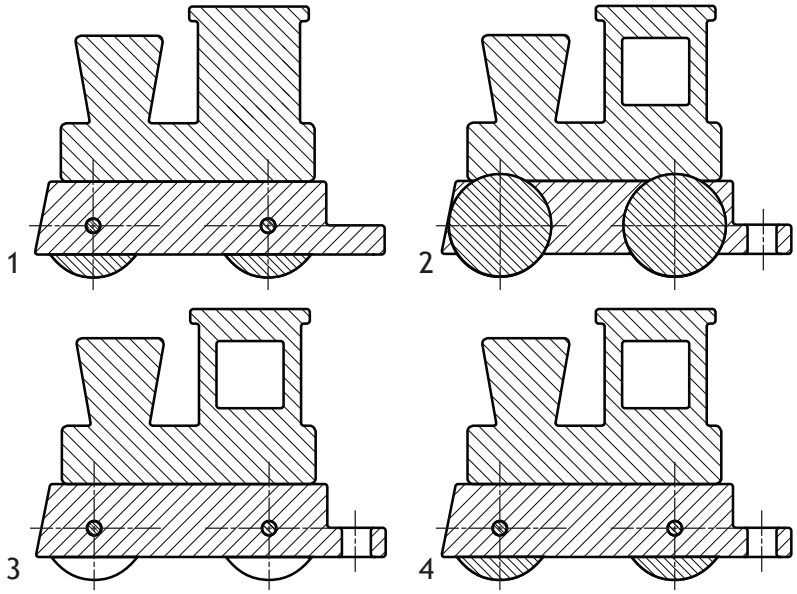

Diagram 2: Sectional Elevations on A—A

(d) State, with reference to Diagram 1a and Diagram 2, the correct Sectional Elevation on A—A. **1**

Four potential Sectional End Elevations of the toy train views are shown below

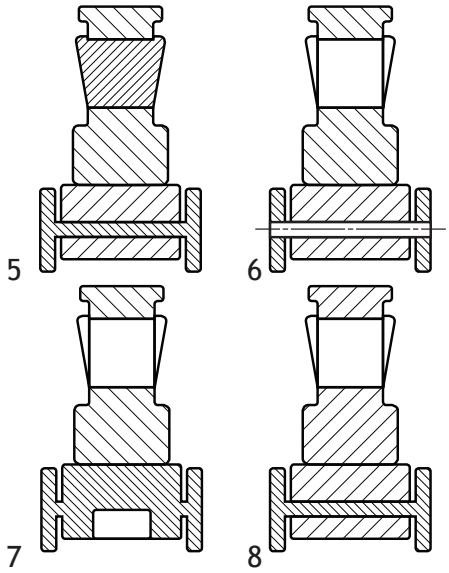

Diagram 3: Sectional End Elevations on B—B

(e) State, with reference to Diagram 1a and Diagram 3, the correct Sectional End Elevation on B—B. **1**

(5)

Date to be returned:	Parental Signature:

Homework 2

1. Below the Elevation, End Elevation and plan of a bracket are shown. Also shown are 12 Sectional Views of the bracket

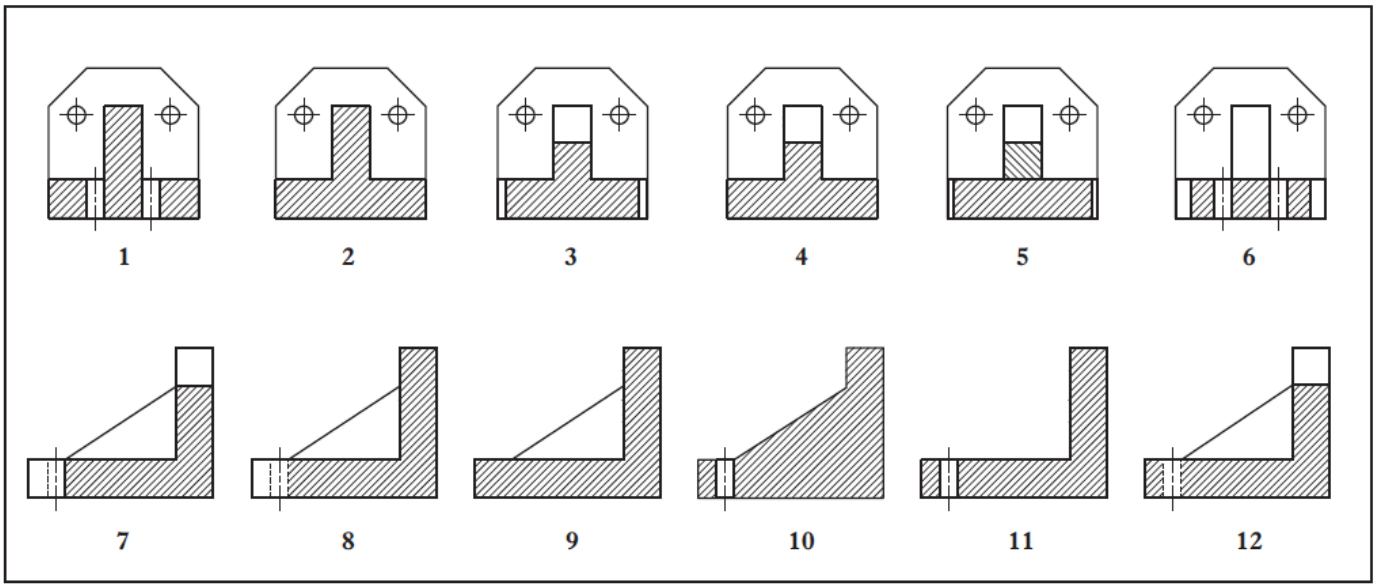

State which of the views above are the correct sections for **AA**, **BB**, **CC** and **DD**.

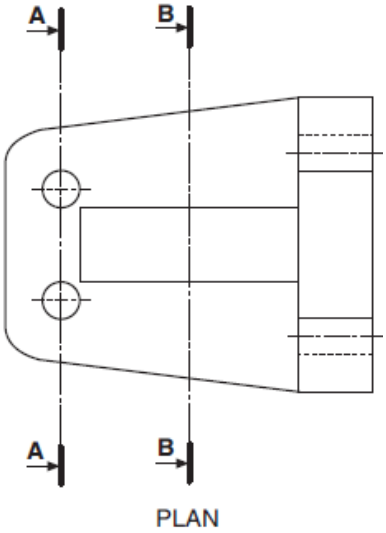

Section AA _____ 1

Section BB _____ 1

Section CC _____ 1

Section DD _____ 1

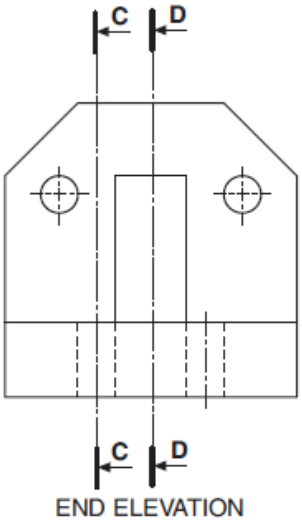

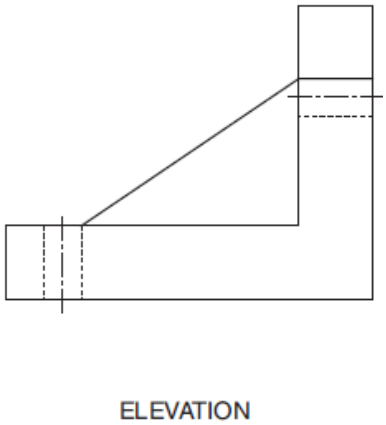

2. Below 8 Sectional Views of the coupling are shown.

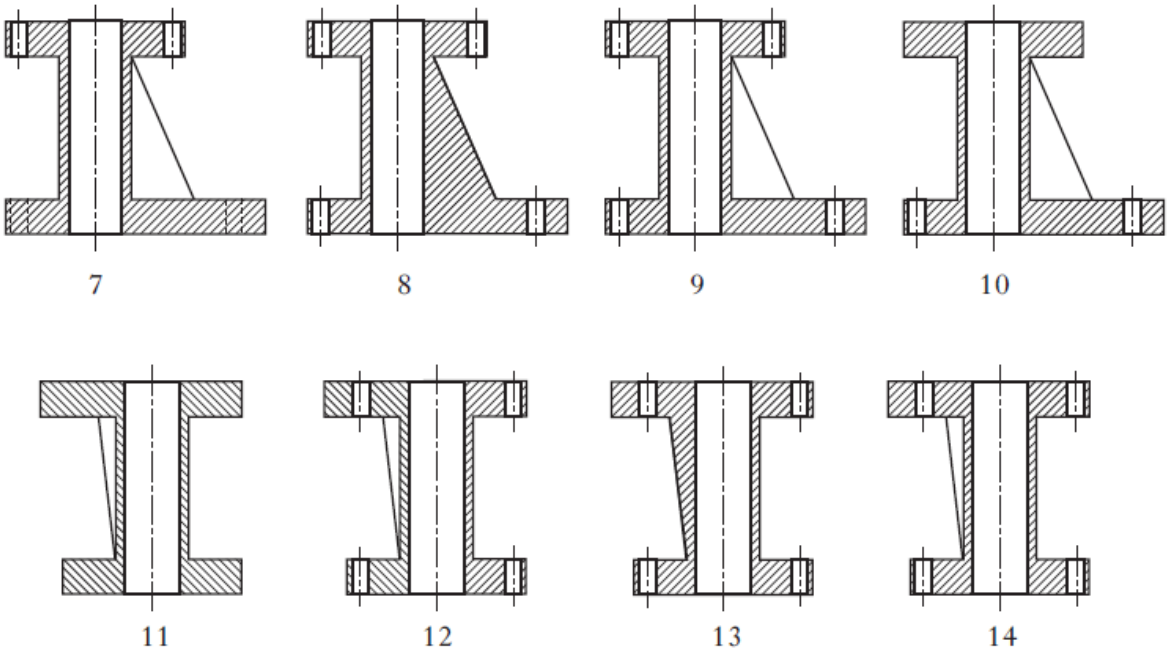

State which 2 are correct.

_____ and _____ 2

3. Name the types of views shown here.

View 1 _____ 1

View 2 _____ 1

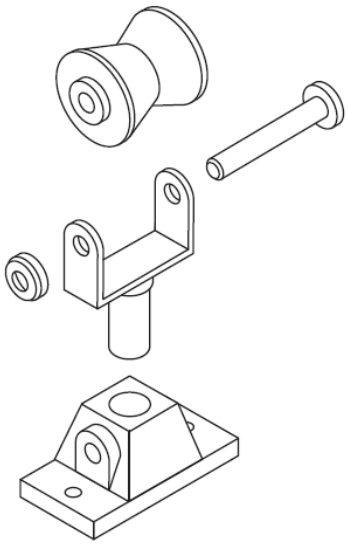

View 1

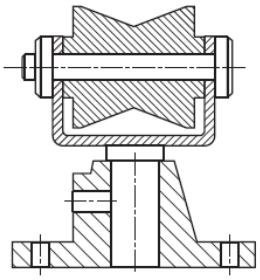

View 2

4. Explain why each of these drawings are produced.

View 1 _____ 1

View 2 _____ 1 (10)

Date to be returned:	Parental Signature:

1.

a) State the name of the views shown here. (4 marks)

View A

_____

View B

_____

View C

_____

View D

_____

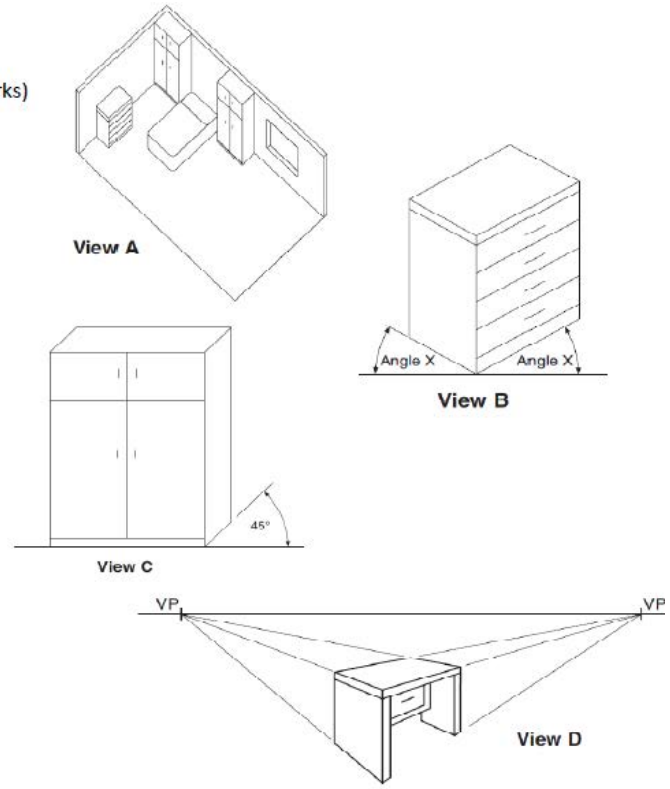

b) State the size of the angles X in View B. (1 mark)

_____

c) What is meant by a scale of 1:2? (1 mark)

_____

d) Add the following dimensions to the bracket shown to British Standards.

i. The width of the top of the block.

ii. The radius of the arc at the bottom.

iii. The diameter of the larger circle.

iv. The distance from the left hand side to the centre line of the first hole on the top.

v. The height of the bracket.

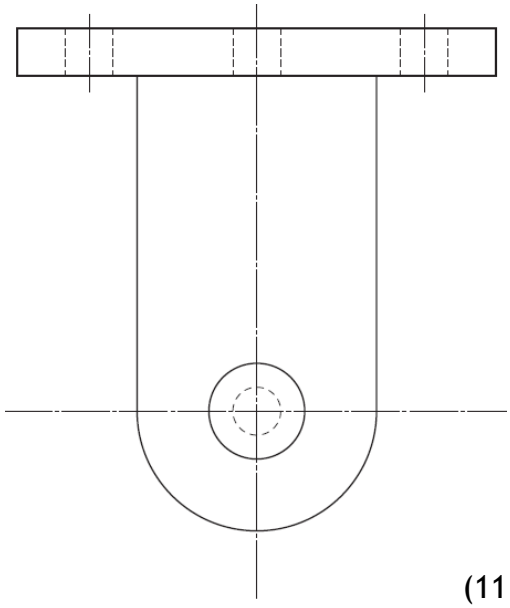

5 (11)

Date to be returned:	Parental Signature:

1. The Elevation, End Elevation and Plan of a coupling are shown below.

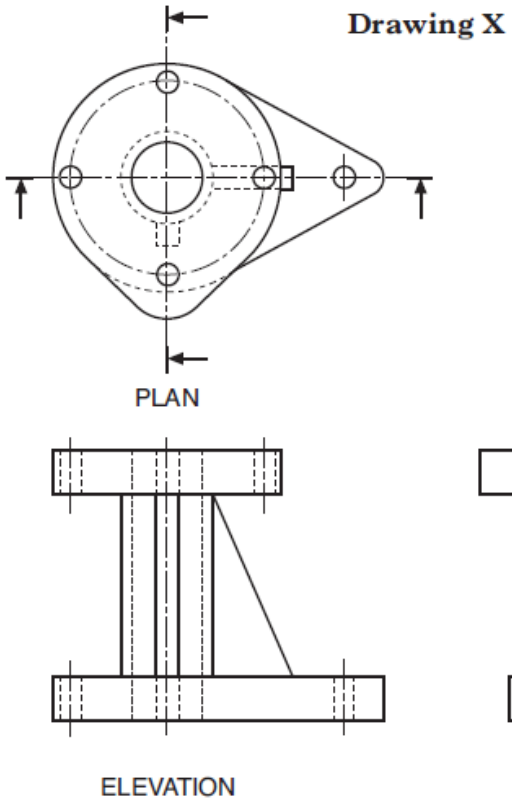

State which 2 of these pictorial views are of the coupling.

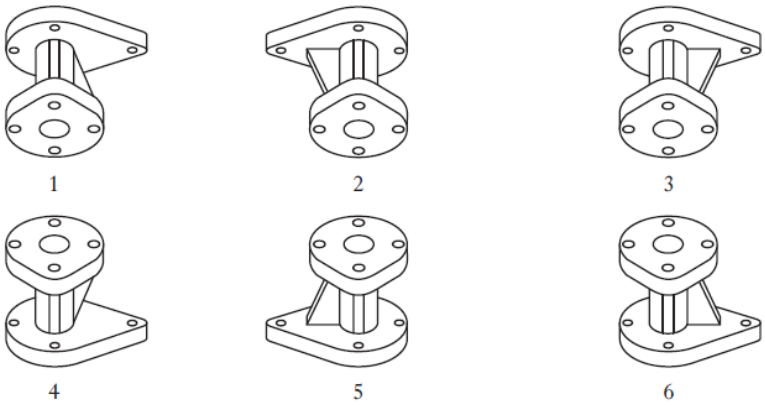

_____ and _____ 2

2. Name 3 different types of pictorial views that could be used to show the coupling.

_____ _____ _____ 3

3. Why are pictorial views of an object produced?

_____

_____ 1 (6)

Date to be returned:	Parental Signature:

Homework 5

1. A bracket is designed to secure one end of an extendable barrier used in cinema queues. The preliminary sketch is shown on page 11. 3D modelling software was used to create a 3D model of the bracket.

The **profile** shown in Step 1 was drawn using 3D modelling software and using the sizes on the preliminary sketch. The "extrude" command is used to make the profile in Step 1 into the 3D model shown in Step 2.

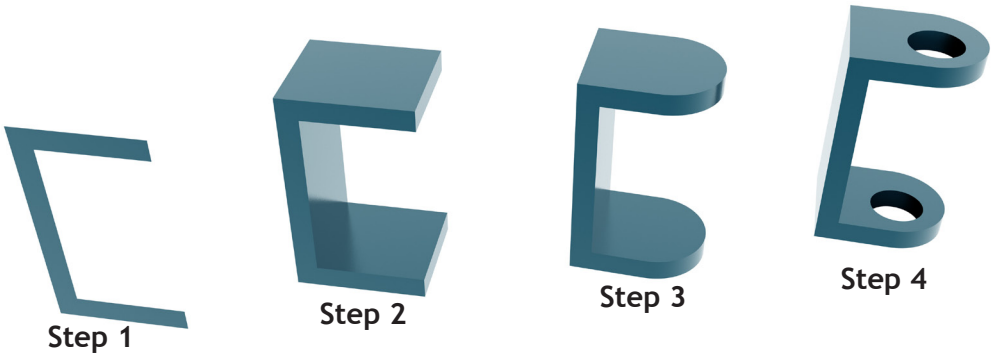

(a) State the size of the extrusion used at Step 2. _____ **1**

The **completed** 3D model is shown in Step 4.

(b) Describe, **with reference to correct dimensions and 3D CAD modelling terms**, how you would use 3D modelling software to complete the model from Step 3 to Step 4.

You may use sketches to support your answer.

_____

_____

_____

_____

_____

_____

_____

_____

_____ **3**

1. (continued)

Figure—Preliminary sketch of bracket

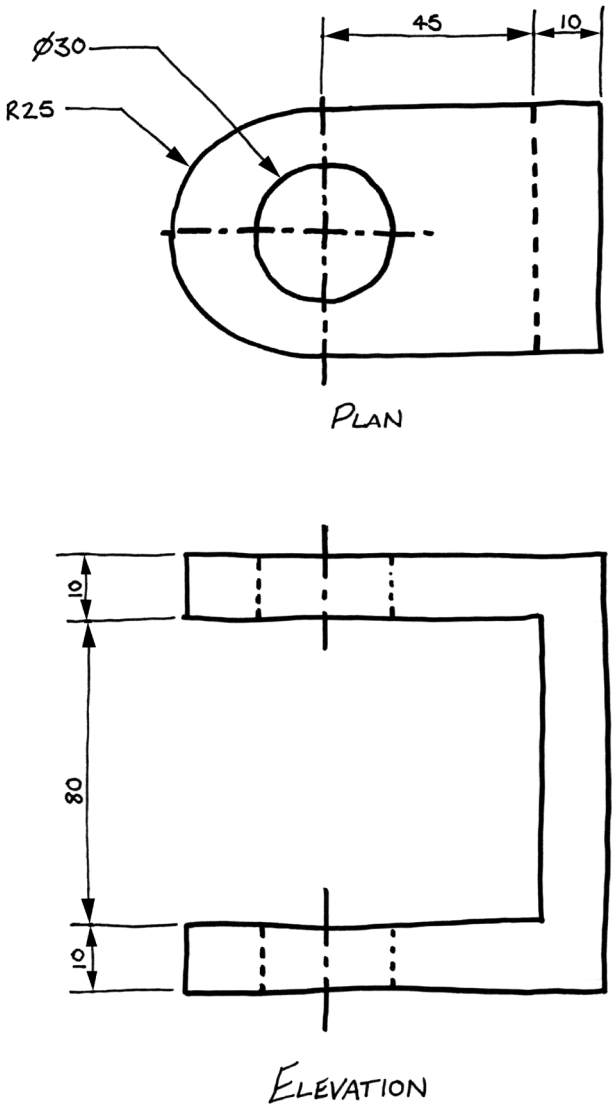

1. (continued)

A pin is needed to secure the belt to the bracket. The pin **must not** fall through the bracket. See the figure below.

3D model of bracket

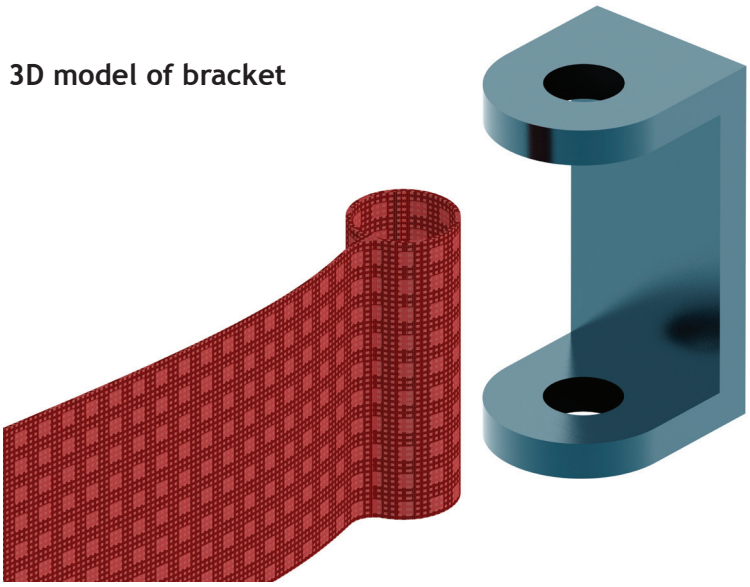

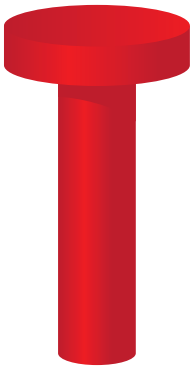

Suggested form for pin

(c) Describe, **with reference to dimensions and CAD modelling terms**, how to produce a 3D CAD model of a pin that will secure the belt to the bracket.

You must make reference to the **dimensions** on the **preliminary sketch**. A suggested form for the pin is shown above.

You may use sketches to support your answer.

_____

_____

_____

_____

_____

_____

_____

_____

4

1. (continued)

An orthographic production drawing is produced from the 3D CAD model as shown below.

There are errors in the drawing.

(d) State **three** errors in the production drawing. **3**

You may annotate the drawing to support your answer.

(i) _____

(ii) _____

(iii) _____

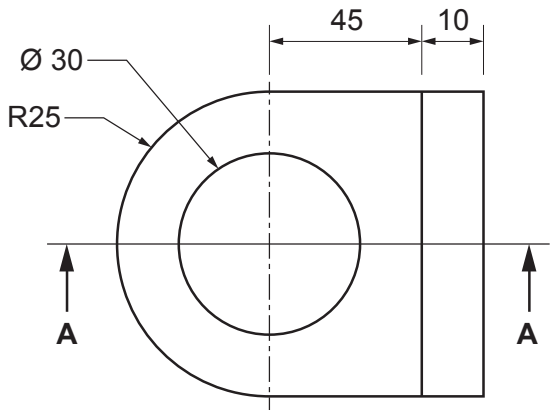

PLAN

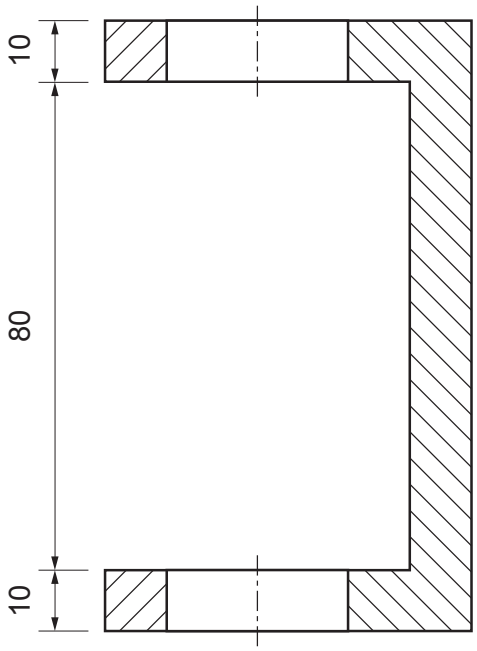

SECTION A-A

Total marks 11

Orthographic production drawing of bracket

Date to be returned:	Parental Signature:

Homework 6

1. "Module" is a shelving system consisting of two sizes of shelves and connecting hubs that can be arranged in a variety of ways. Rendered 3D CAD illustrations are shown below.

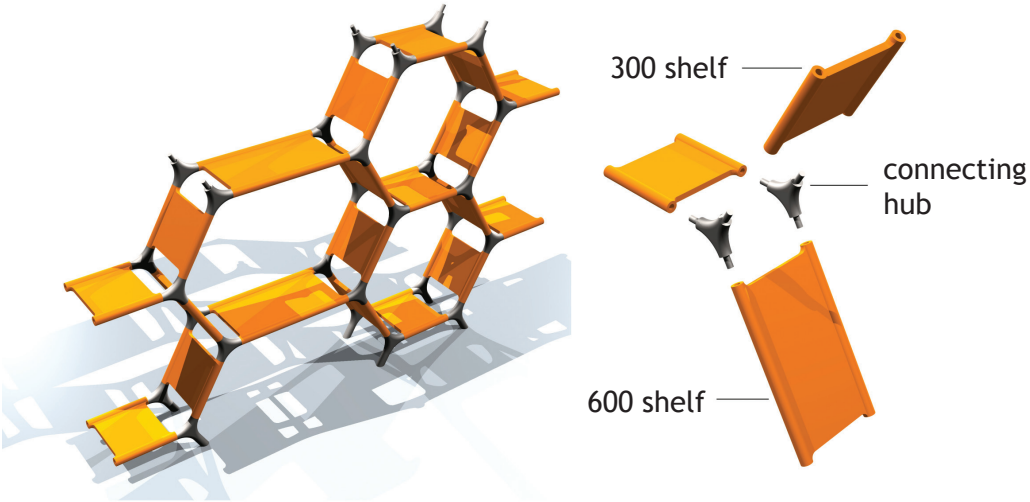

Rendered 3D CAD illustrations

An orthographic sketch of the connecting hub is shown below.

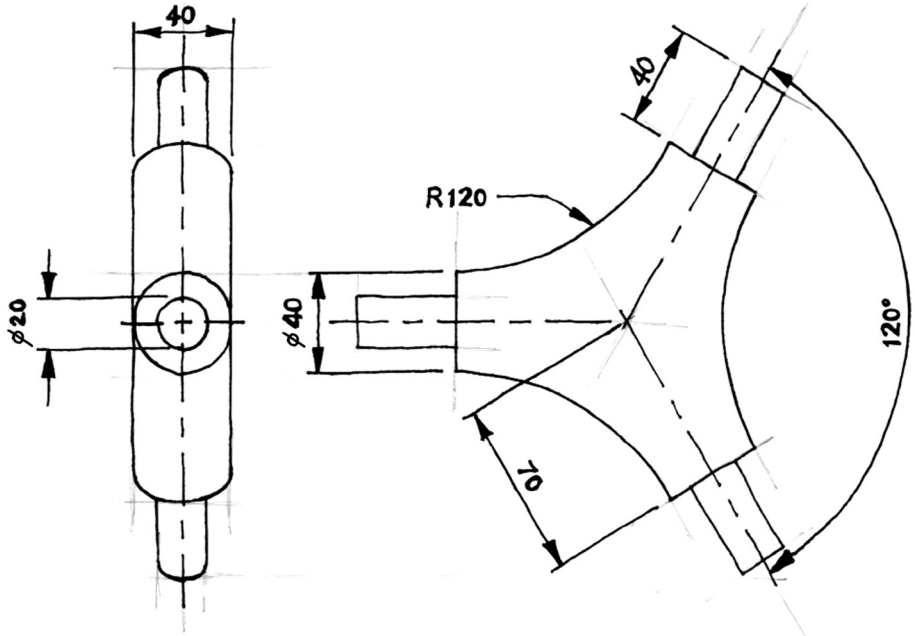

End Elevation

Elevation

1. (continued)

(a) Describe, using the correct dimensions and 3D CAD modelling terms, how you would use 3D CAD software to model the hub. You may use sketches to support your answer. **6**

1. (continued)

Orthographic assembly drawings of an arrangement of the shelving system are shown below.

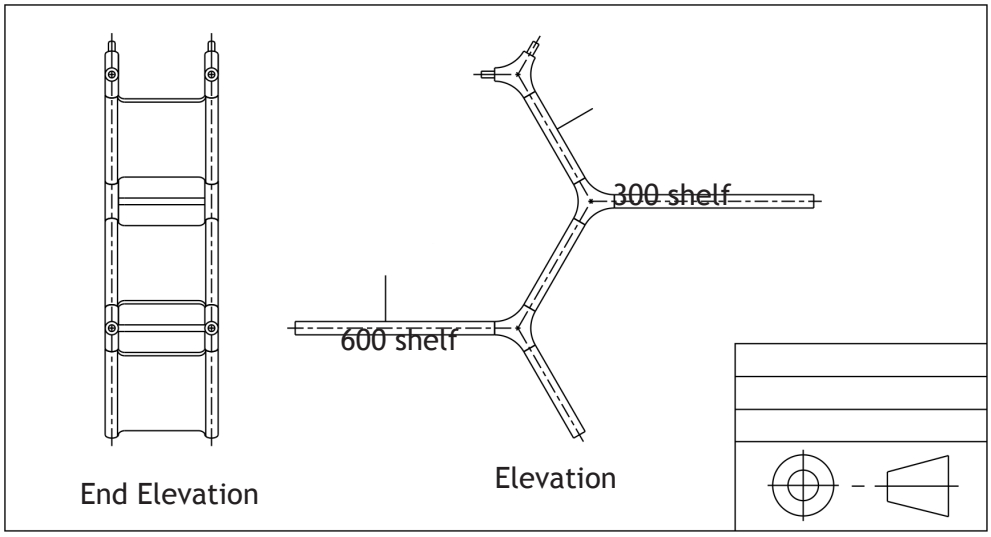

(b) Indicate using a tick (✓) the **two** pictorial assembly drawings that match the arrangement shown in the orthographic assembly drawing above. **2**

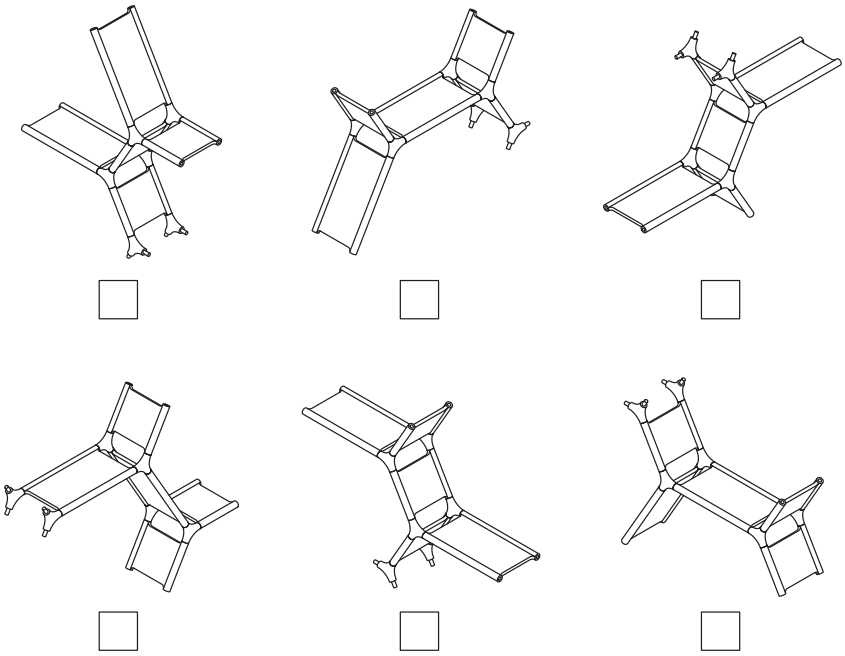

1. (continued)

The CAD technician produced a variety of arrangements of the shelving system.

(c) State the CAD feature that would allow the CAD technician to produce a variety of assemblies quickly and efficiently. **1** (9)

Date to be returned: Parental Signature:

1.

FORM UK have decided to launch the new chair at a number of international furniture trade shows. During the shows, promotional materials for the new chair will be distributed.

The designer was tasked with producing a postcard which met the following design specification:

The postcard must:

- Create impact.
- Encourage further exploration of the product.
- Provide basic details of function.
- Appeal to a target audience of 18-40 year old males and females.
- Create a modern layout.
- Create a sense of depth.

The final design is shown below.

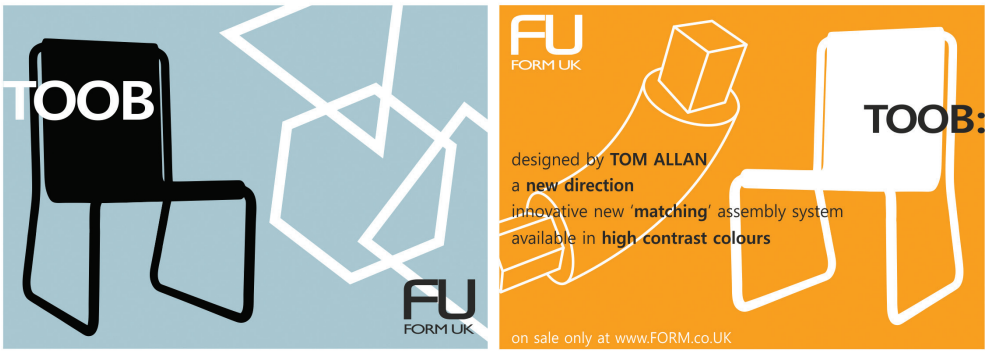

Front of postcard Back of postcard

FORM UK are happy that the above postcard meets all of the specification points.

(a) Describe how the postcard has met the specification points. **4**

1. (continued)

FORM UK commissioned the graphic designer to also develop a mobile app to launch the chair. The graphic designer was tasked with creating a layout that used similar graphic content to the postcard. An image of the finished app is shown below.

(b) Describe **two** advantages that an electronic promotional item gives the company over traditional promotional items. **2**

(c) Explain how the production of the app can be simplified by having the graphic elements already digitally produced. **2**

(8)

Date to be returned: Parental Signature:

Homework 8

1. A furniture designer has created some preliminary sketches for a new chair. These sketches were given to a CAD technician who will make a 3D CAD model.

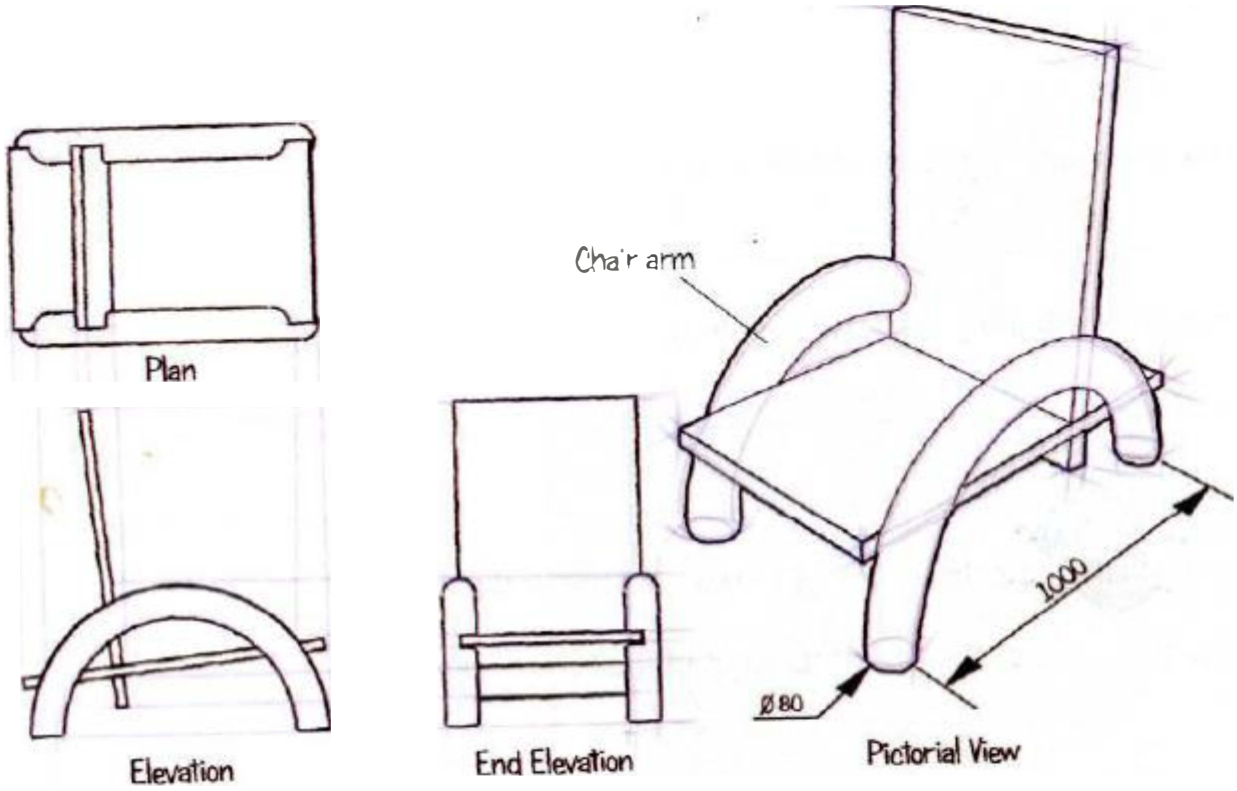

The CAD Technician used the revolve command to model the arms of the chair.

(a) Describe using the correct dimensions and 3D CAD modelling terms, how you would use 3D CAD software to model one arm of the chair. Do not model the slots in the arm. You may use sketches to support your answer.

3

1. (continued)

The chair requires two arms - one for the left and one for the right. The CAD technician modelled the left-hand arm first.

(b) Describe how the CAD technician can make an identical right-hand arm without starting a new model. 2

(c) The chair should be assembled as follows.

There is also a rod that connects the two parts of the chair.

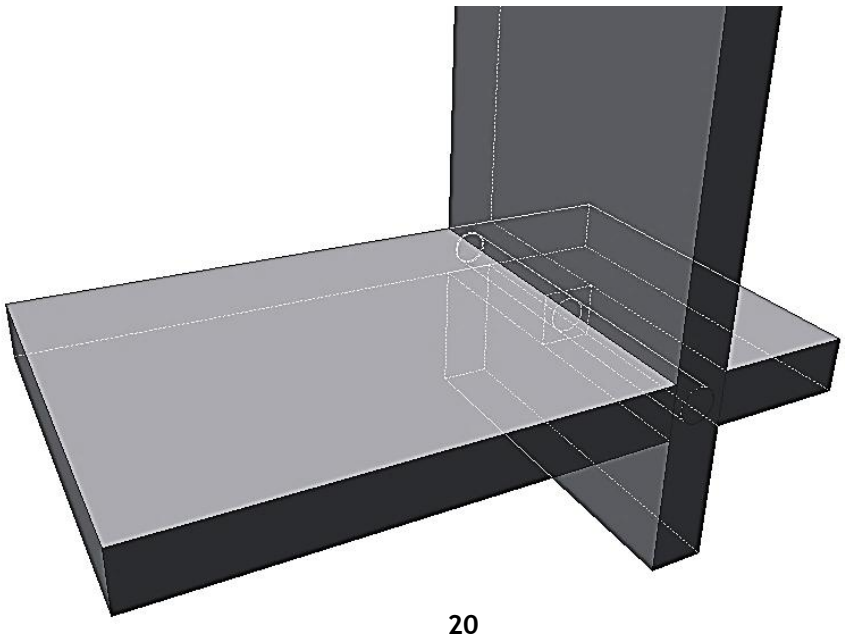

(c) Indicate, by **shading,** the relevant **surfaces** and state, using 3D CAD terms, how you would assemble and constrain the given components.

Stage one has been shaded for you.

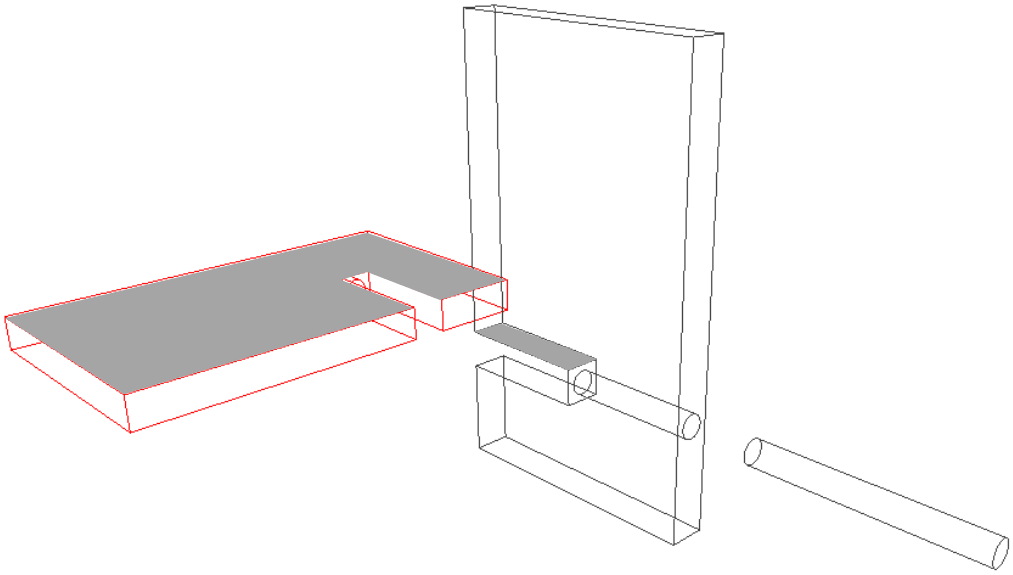

1

Constraint Used: _____

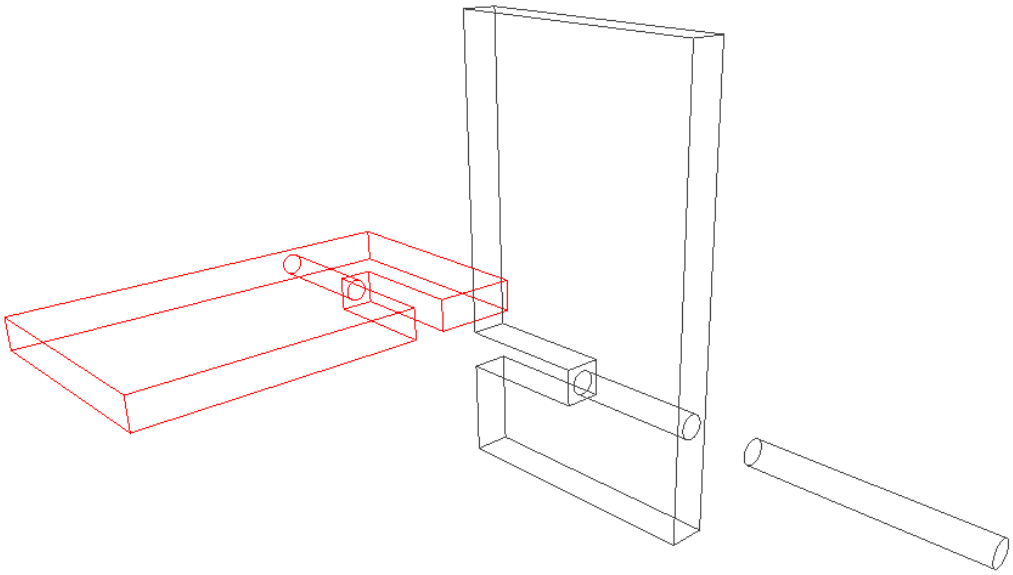

1

Constraint Used: _____

(c) continued

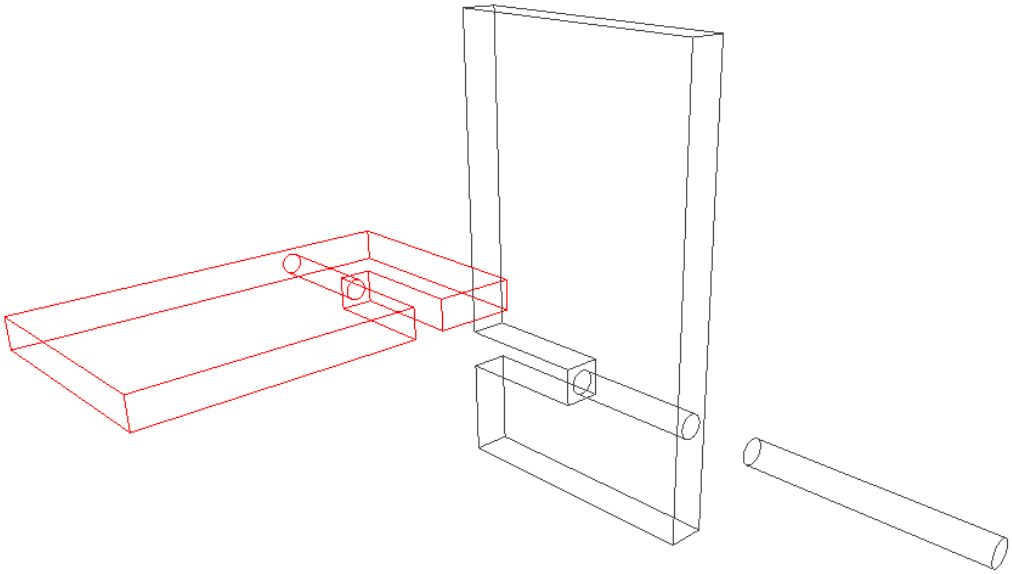

1

Constraint Used: _____

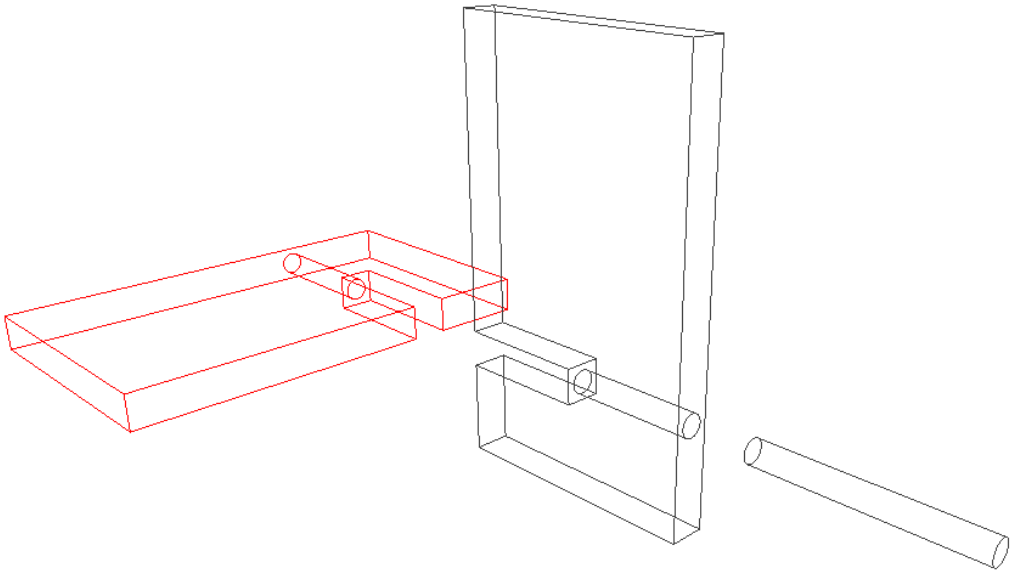

1

Constraint Used: _____

(9)

Date to be returned:	Parental Signature:

Homework 9

1.

An exploded isometric and the working drawing of the bracket used to hold the skateboards to the display board are shown below.

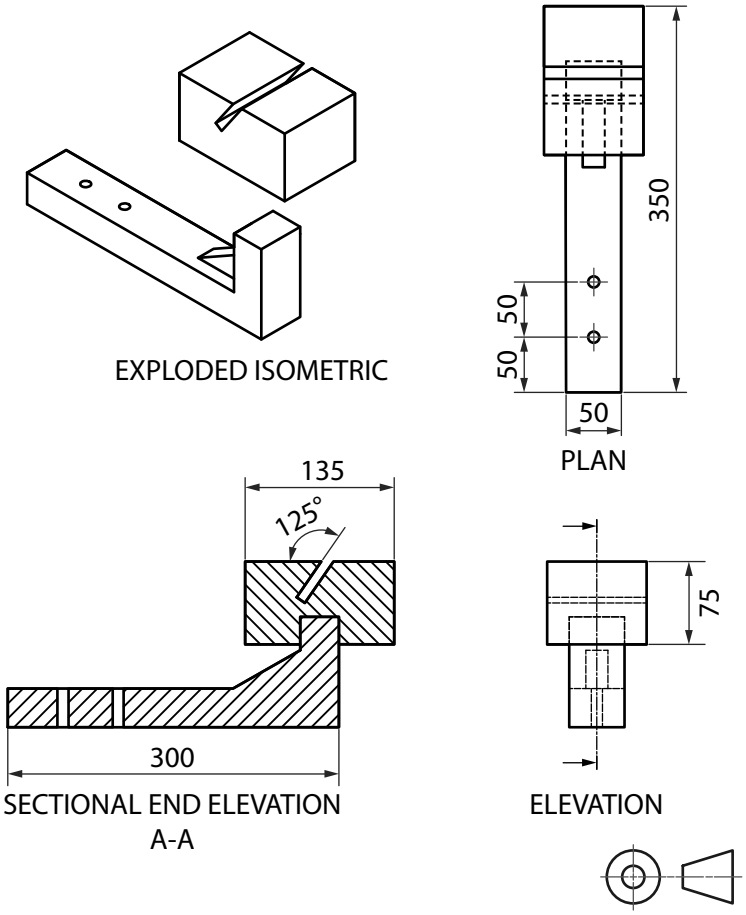

The CAD technician recognised **five** pieces of information in the working drawing that did not adhere to British Standard conventions.

(e) State the **five** errors found in the drawing.

You may annotate the drawing to support your answer. **5**

Date to be returned:

Parental Signature:

1. An advertising company has produced a promotional graphic to be used at a sports stadium. The graphic will be placed on the advertising boards around the pitch.

The initial layout is shown below.

Layout 1

(a) State **one** instance where **harmony** has been used in **layout 1**. **1**

The graphic artist has decided to change the background colour to violet as shown below.

Layout 2

(b) (i) Explain a reason for changing the background colour to violet. **1**

(ii) State whether violet is an advancing or receding colour. **1**

(iii) Describe the effect the violet background colour has on the watch. **1**

1. (continued)

The graphic artist wants to change the shade of violet used for the background colour as shown below.

Layout 3

(c) Explain how to create a **shade** of violet. **1**

_____

_____

(d) Describe **two** examples of **unity** in **layout 3**. **2**

Method 1 _____

_____

Method 2 _____

_____

(e) Describe how the desktop publishing technique **'bleed'** has been used in **layout 3**. **1**

_____

_____

(f) Describe how the desktop publishing technique **'reverse'** has been used in **layout 3**. **1**

_____

_____

2. (continued)

The owners of the sports stadium decide to show the advert on their electronic advertising boards.

(g) State **two** environmental benefits of advertising this way. **2**

Benefit 1 _____

Benefit 2 _____

Total marks **(11)**

Date to be returned:	Parental Signature:

Homework 11

1. A company, WAVE, are promoting a new wireless speaker using a webpage. A graphic designer has produced a series of thumbnails for the design of the webpage.

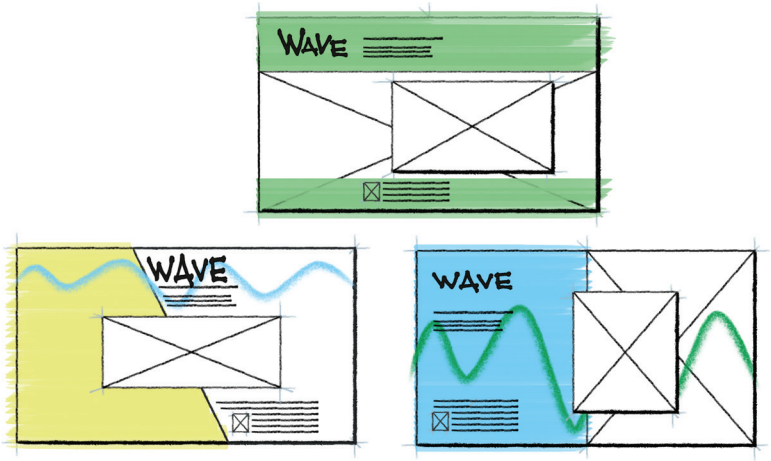

(a) State **two** reasons why thumbnail sketches would be produced during the preliminary stages. **2**

_____

_____

_____

_____

1. (continued)

The graphic designer selected one of the thumbnails and decided to use DTP software to develop the initial idea. The thumbnail is shown below with the designer's annotations showing suggested changes.

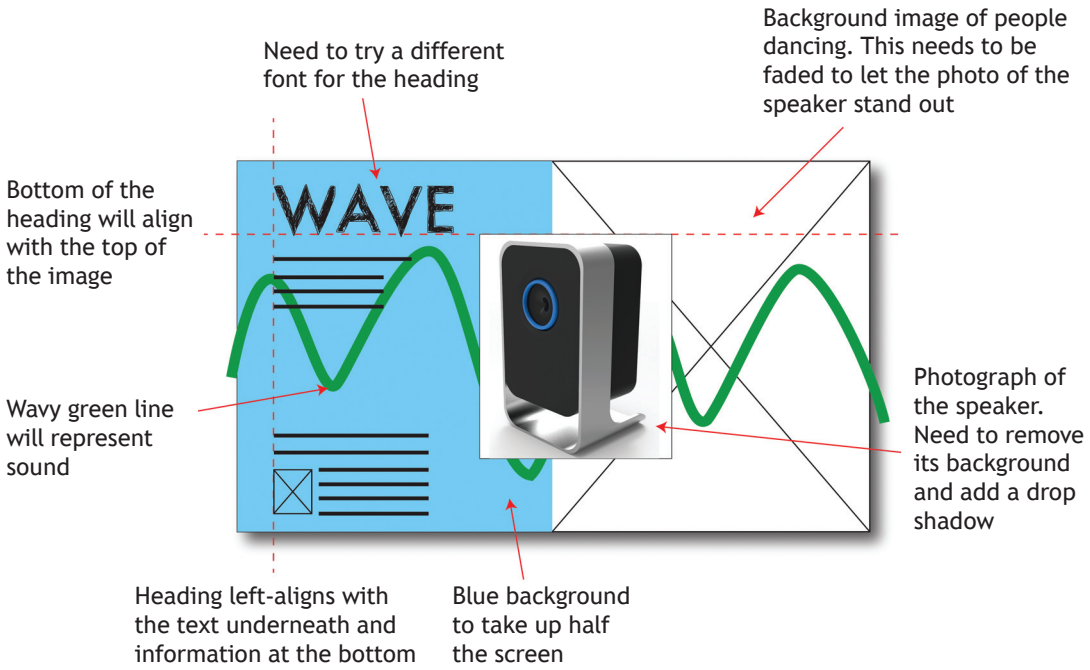

The graphic designer used the above thumbnail annotations to develop the design using DTP software.

(b) Explain **three** advantages to the graphic designer of using DTP software to produce a graphic layout. **3**

1. (continued)

The final design for the webpage is shown below.

(c) Describe the effect to the webpage of using the **green lines**. **2**

(d) Explain how the graphic designer has used the following design elements and principles to create visual impact in the final design.

(i) Depth **2**

1. (d) (continued)

(ii) Dominance **2**

(iii) Alignment **2**

(e) Transparency has been applied to the image of the people dancing in the webpage.

Describe why the graphic designer has used the desktop publishing technique "transparency" on this image. **1**

(f) Describe how the desktop publishing technique "bleed" has been used in the webpage design. **1**

The company, WAVE, originally planned on using posters to promote their product.

(g) Describe the **positive** impact to the environment of using a webpage rather than printed posters to promote the product. **2**

(17)

Date to be returned: Parental Signature:

Homework 12

Text and images for final layout

Flashbar

Box

Photograph of model

Slogan—

For the busy woman who needs her fragrance to last all day

Product name

Clara

Perfume bottle

Skyline silhouette

Final layout

1. A poster promoting "Clara", a women's perfume, is shown on the previous page. The text and the images used in the poster are laid out in their original form at the top of the page. The final poster layout, (bottom of the page), promotes the perfume. The original graphics and text were edited in a DTP package before being placed in the final layout.

(a) State the **name** and **impact** created of the DTP editing feature applied to each of the original items to get them ready for use in the final layout

Do not include "**scaling** or **resizing**" in your answer. **Ensure you do not use the same answer twice.**

(i) **Photograph of the model**—state **one** DTP edit. (2)

Edit_____

Impact_____

_____

(ii) **Perfume bottle**—state **one** DTP edit. (2)

Edit_____

Impact_____

_____

(iii) **"Clara" product name**—state **one** DTP edit. (2)

Edit_____

Impact_____

_____

(iv) **Slogan**—state **one** DTP edit (do not repeat a previous answer). (2)

Edit_____

Impact_____

_____

(v) **Flashbar**—state **one** DTP edit. (2)

Edit_____

Impact_____

_____

(b) Describe why a serif font was chosen for the article

(c) Explain how depth, dominance and unity have been used and how they enhance the advert (6)

Depth

Dominance

Unity

(c) When setting up the layout the designer used the following DTP features:

Grid and **Snap to grid.**

State **two** ways in which the use of **Grid** and **Snap to grid** benefit the graphic designer. (2)

(18)

Date to be returned: Parental Signature:

Homework 13

1. Name 3 types of drawings that are produced at the Preliminary stage of developing a product? (3)

_____

_____

2. What is the purpose of producing preliminary sketches? (1)

_____

_____

3. Name 3 types of drawings that are produced at the Production stage of developing a product? (3)

_____

_____

4. What role do production drawings play in producing a product? (1)

_____

_____

5. Name 3 types of drawings that are produced at the Promotional stage of developing a product? (3)

_____

_____

6. Why are promotional drawings produced? (1)

_____

_____

(12)

Date to be returned:	Parental Signature:

Homework 14

1. A graphic designer for a football magazine is commissioned to design a chart or graph. It should display the information in the table below in a visually stimulating and easy to read manner.

English Premier League players' average annual basic wages from 2000—2010	
Season	*Average annual basic wage*
2000—2001	£451,274
2001—2002	£566,932
2002—2003	£611,068
2003—2004	£651,222
2004—2005	£630,355
2005—2006	£685,748
2006—2007	£778,103
2007—2008	£960,377
2008—2009	£1,066,391
2009—2010	£1,162,350

(a) State the most suitable type of chart or graph to use when presenting the information in the table above. **1**

_____

(b) Explain **one** reason for using this type of chart or graph. **1**

_____

_____

2. A company that makes bicycles is celebrating a successful year. They have excellent sales figures and want to use them to help promote their success.

A graphic designer has been asked to produce graphs or charts that make the sales figures more visual for use in promotional graphics. The sales figures are shown below.

Sales figures A

Worldwide bicycle sales by percentage in 2011

UK Sales	37%
European sales	27%
USA sales	20%
Australian sales	11%
Sales in other countries	5%

Sales figures B

Monthly bicycle sales in 2011

Month	Number of sales
Jan	1,600
Feb	1,100
Mar	1,200
Apr	2,600
May	2,200
Jun	3,200
Jul	5,600
Aug	6,900
Sept	2,400
Oct	1,150
Nov	1,100
Dec	9,250

(a) Based on Sales figures A:

(i) state the best type of graph or chart to use when presenting **Sales figures A** information; **1**

_____

(ii) state one reason for using this type of graph or chart. **1**

_____

(b) Based on Sales figures B:

(i) state the best type of graph or chart to show the **Sales figures B** over the year; **1**

_____

(ii) state one reason for using this type of graph or chart. **1**

_____

Total marks (6)

Date to be returned: Parental Signature:

Homework 15

1. An incomplete floor plan for a bathroom is shown.

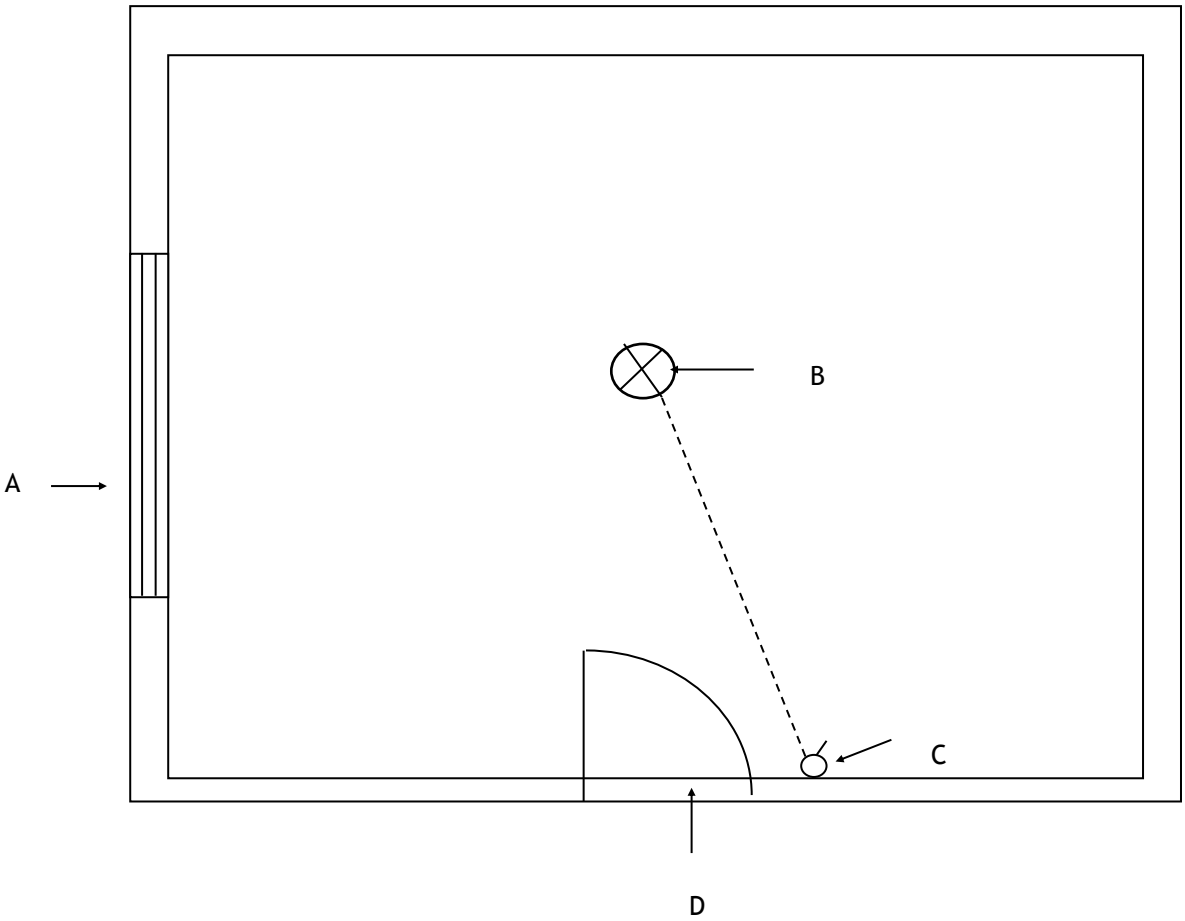

a) Identify the BSI Symbols A-D

A. _____ B. _____

C. _____ D. _____ (4)

b) Add the following BSI symbols to the Bathrooms floor plan.

a Washbasin b. Shower Tray

b Bath d. Socket (4)

2. In the space provided name the type of Architectural plan shown and state a suitable scale. 6 marks

Ground level showing the proposed store

Type of plan: _____

Scale: _____

Type of plan: _____

Scale: _____

Location of proposed site

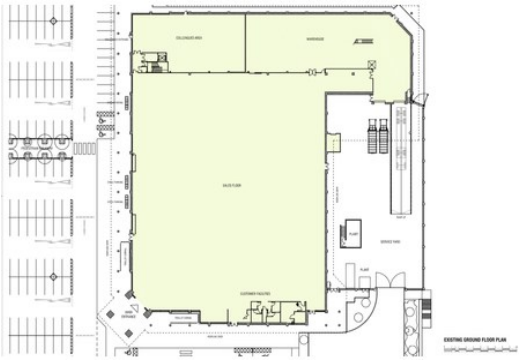

Type of plan: _____

Scale: _____

Total marks (14)

Date to be returned:	Parental Signature:

Homework 16

1. Terra Leisure group have designed a range of eco lodges as part of their new holiday park accommodation. The graphic designer produced a flyer detailing the range. The final design is shown below.

Graphics for a construction project fall into 3 main types: *Preliminary, Production and Promotional*.

(a) (i) State, from the list given above, the **type** of graphic shown above. **1**

_____

(ii) Describe the purpose of this type of graphic. **1**

_____

_____

_____

A 3D rendered illustration of the lodge was required for the flyer. Terra Leisure had this illustration produced by a CAD technician in another country.

(b) Describe **two** advantages that **remote working** offers to Terra Leisure. **2**

_____

_____

_____

_____

_____

_____

1. (continued)

A plan of the holiday park was drawn up as part of the construction project.

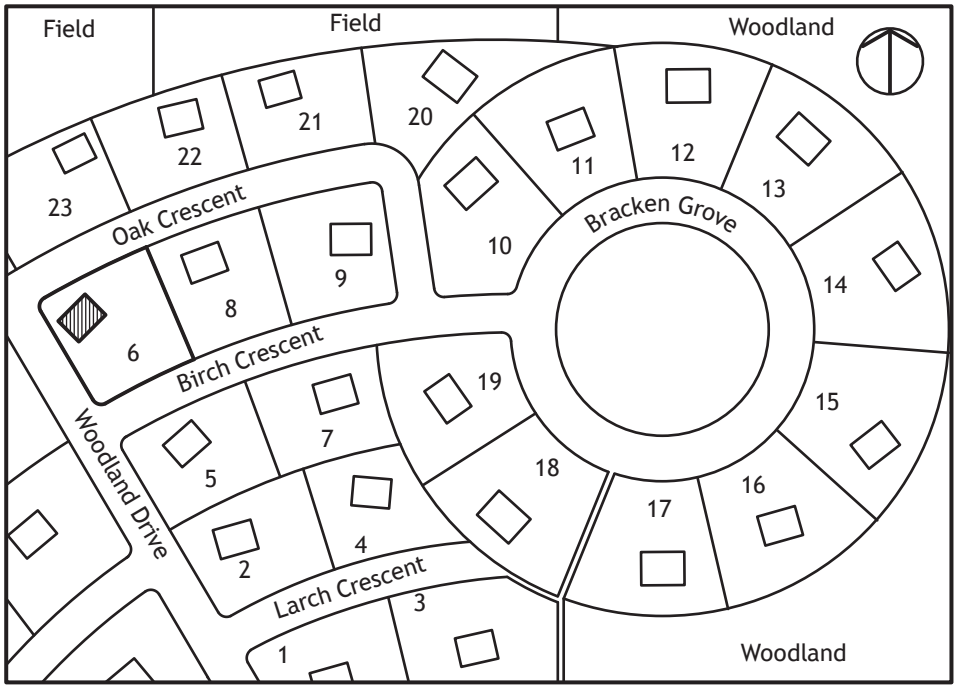

(c) (i) State the name of the plan type shown. **1**

_____

(ii) State a scale that is commonly used for this plan type. **1**

_____

Total marks (6)

Date to be returned: Parental Signature:

Homework 17

1. A partially drawn hexagon is shown below:

a) Complete the plan (1)
b) Complete the end elevation (4)
c) Complete the surface development (5)

Total (10)

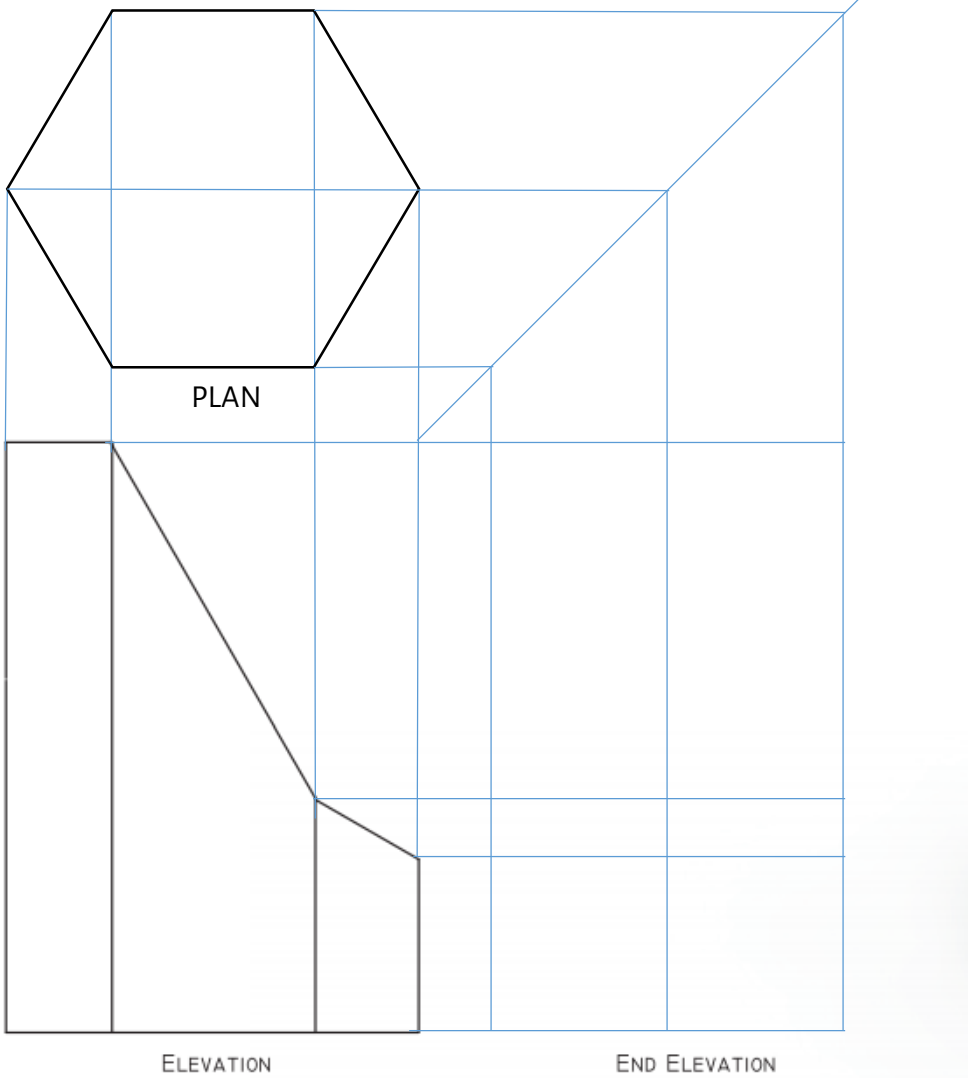

PICTORIAL ILLUSTRATION (NOT TO SCALE

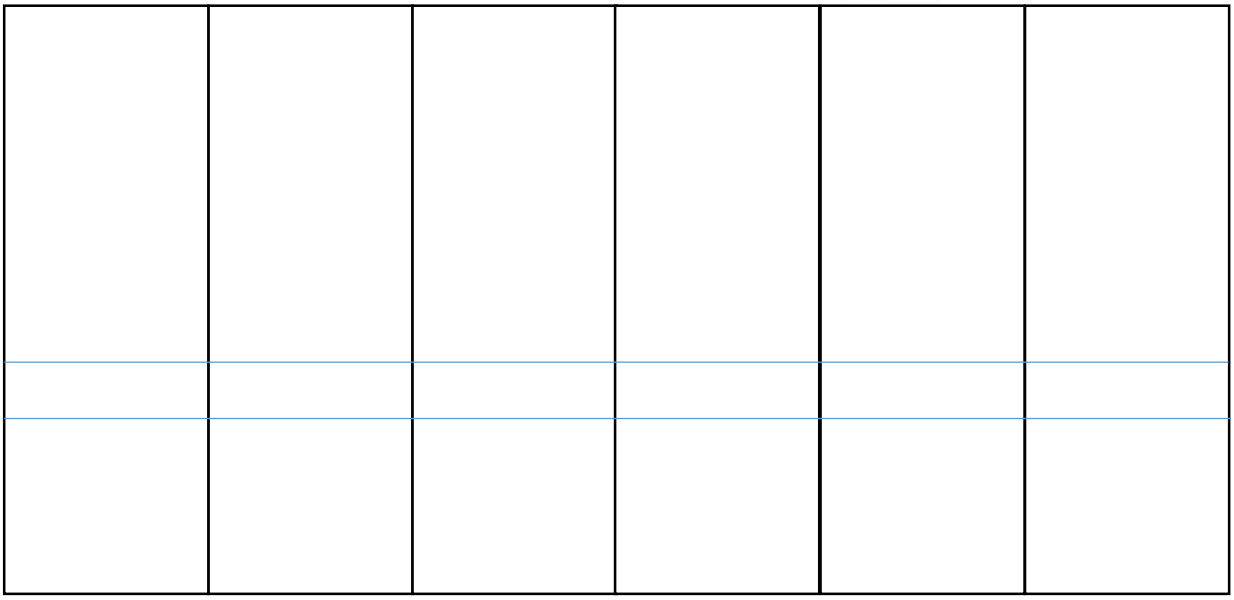

SURFACE DEVELOPMENT

Homework 18

An environmental charity wants to encourage people to recycle old batteries. They employed a design engineer to make a 'Battery Bin' where people could drop used batteries.

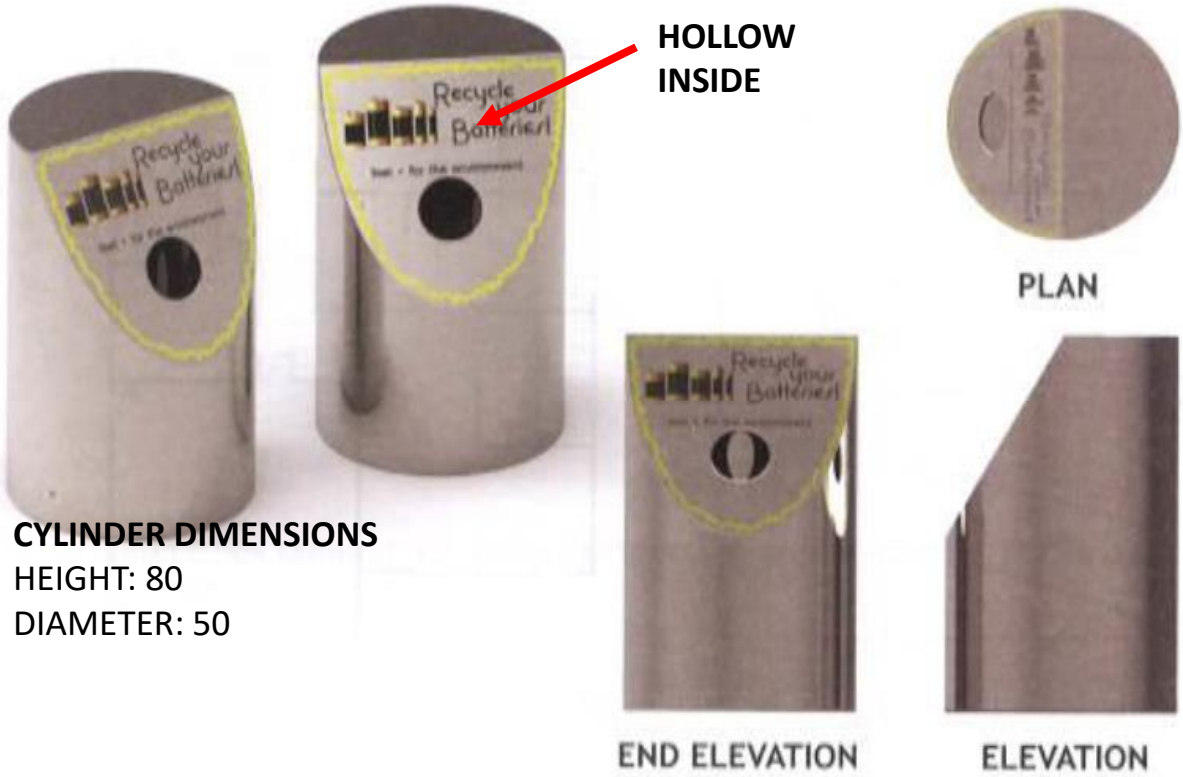

The graphic designer used 3D CAD to make a 3D model.

(a) Describe, **using 3D CAD modelling terms**, how the CAD model was created. You may use sketches to illustrate your answer. 4

b) Using the drawing below complete the end elevation of the cylinder. (4)
Include a suitable numbering system.

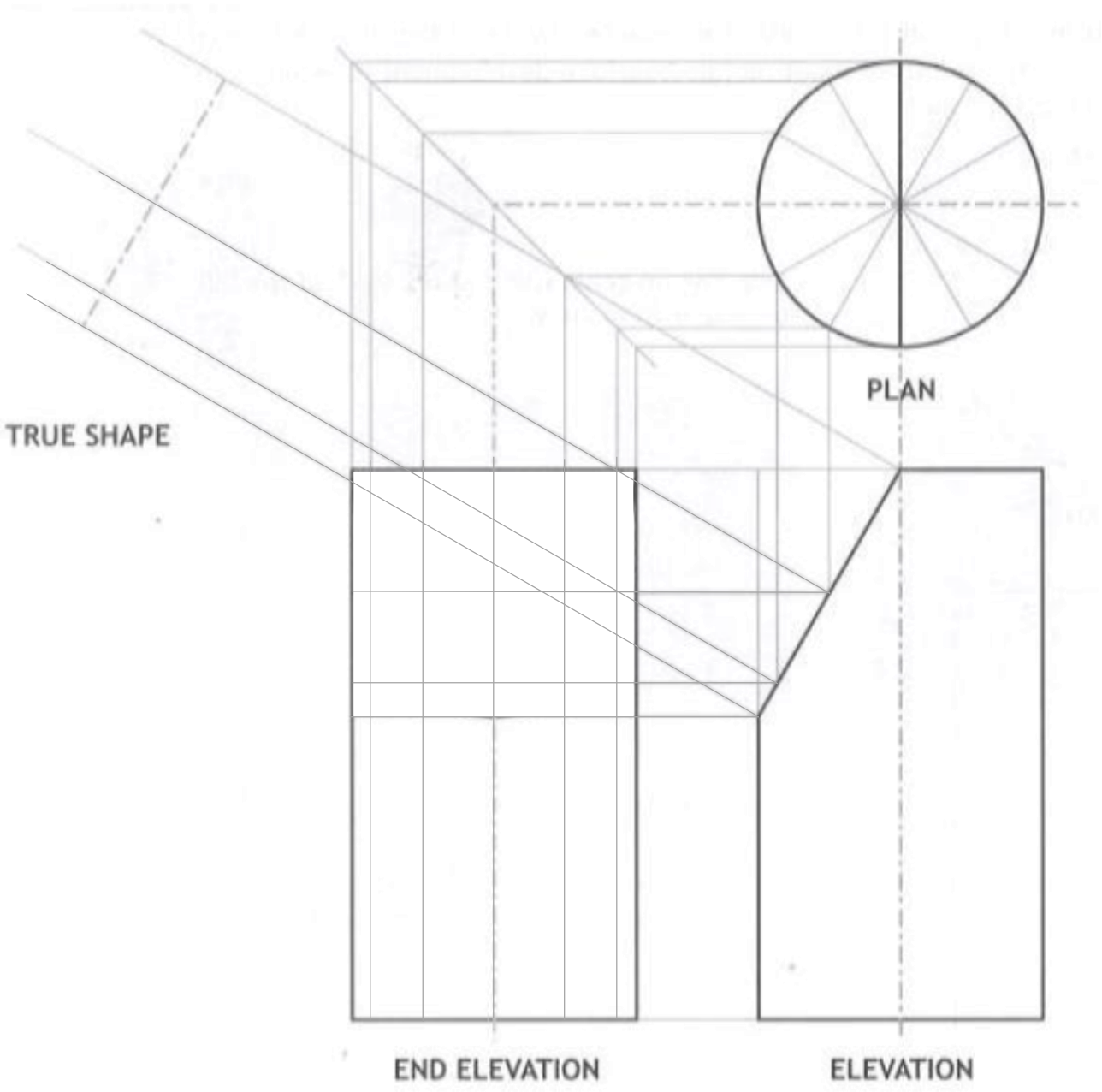

c) Looking back to the previous drawing, identify the correct true shape from the options below by placing a tick in the correct view. (1)

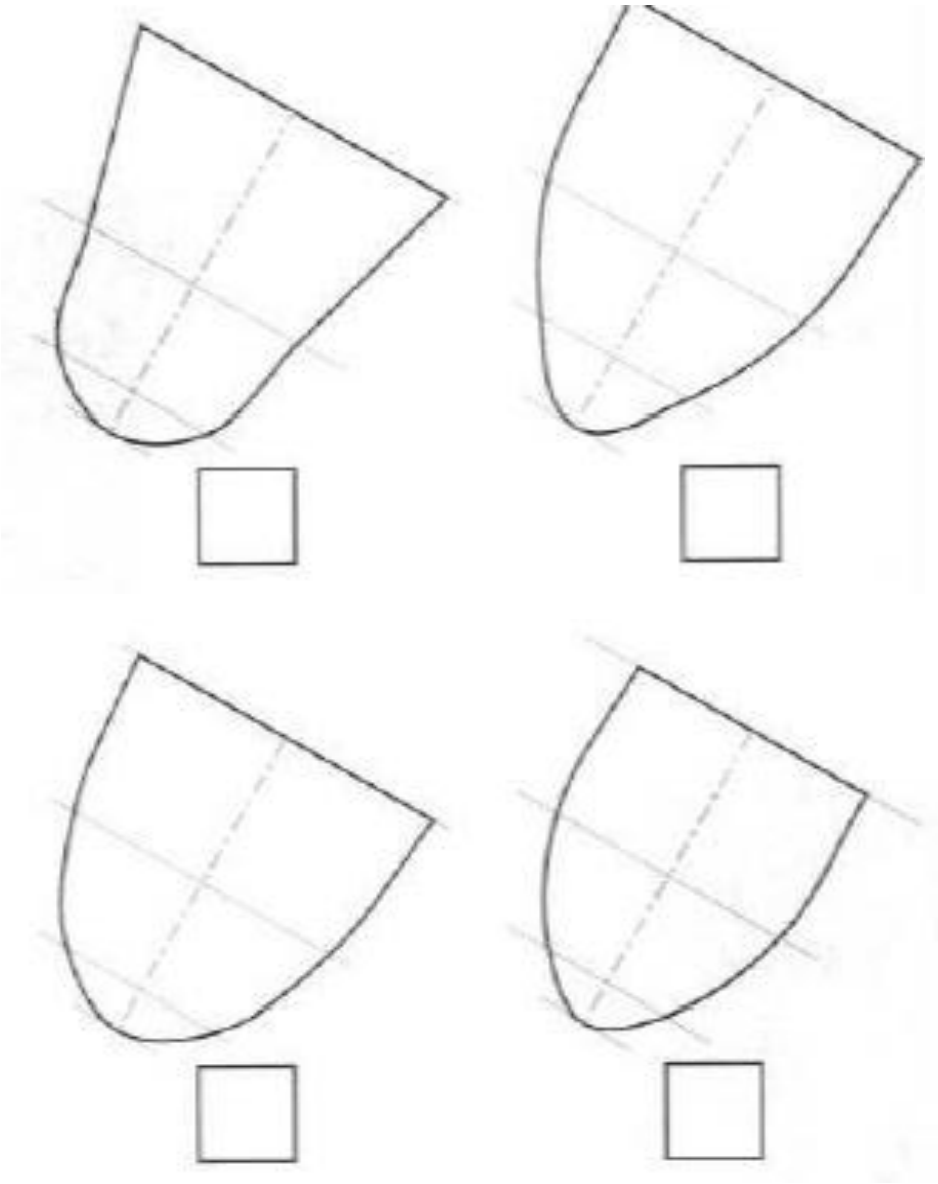

2D CAD drawings will be produced to enable CNC manufacture. The 'Battery Bin' will be formed from sheet metal. A surface development is required to be marked onto the metal.

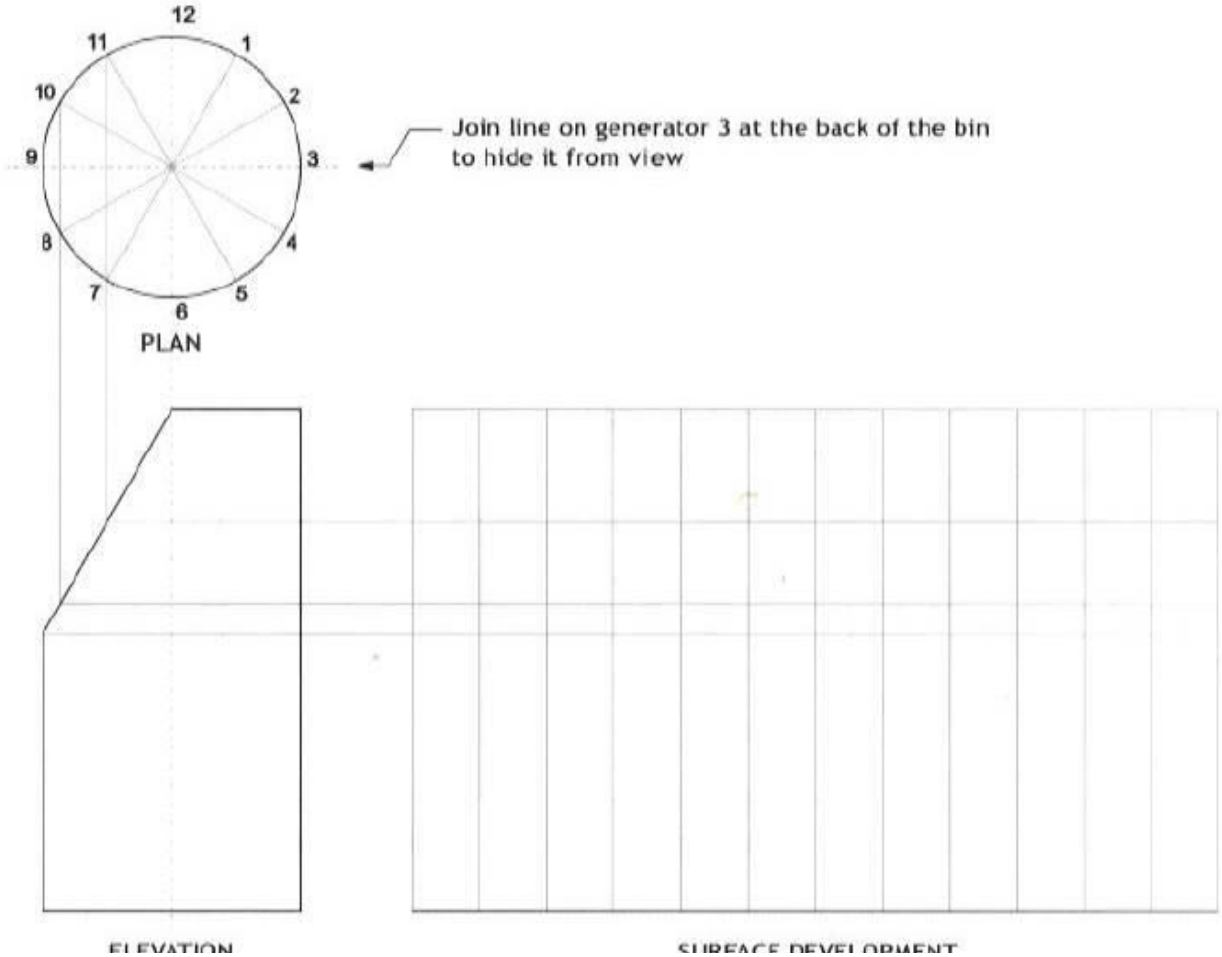

d) Completed the generators by adding numbers to the surface development. 1

e) Completed the surface development by marking the sloping surface on the generators and adding the outlines. You may sketch your answer or mark crosses on the generators and annotate to describe your answer. 3

Total (13)

Date to be returned:	Parental Signature:

Homework 19

1. An outdoor supplies company is designing a range of tents for young people to take to music festivals. One of their designers has made preliminary pictorial and orthographic sketches for a possible new tent as shown below.

Preliminary pictorial sketch of festival tent

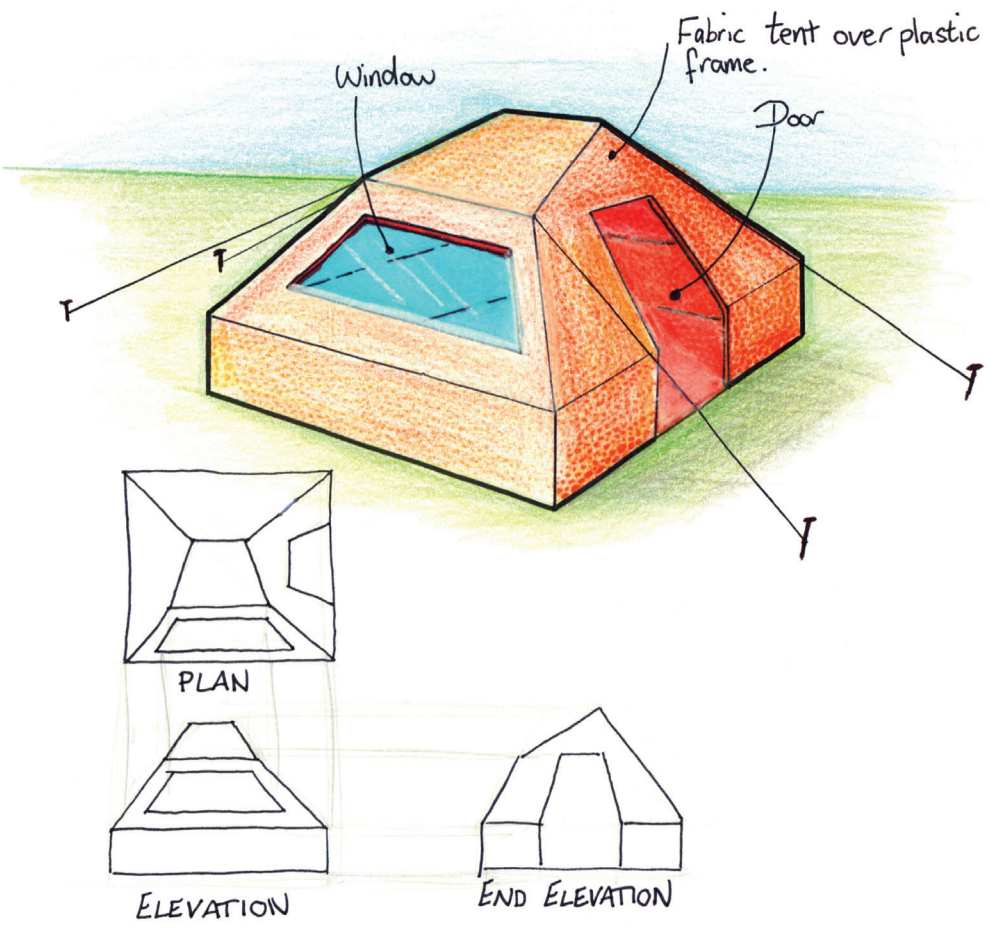

Preliminary orthographic sketch of festival tent

1. (continued)

The tent fabric is made from a single sheet. A surface development showing the **outer surface** of the tent fabric is shown below.

Indicate on the surface development below, the location of:

the window—using the letter "**W**"; **1**

the door—using the letter "**D**". **1**

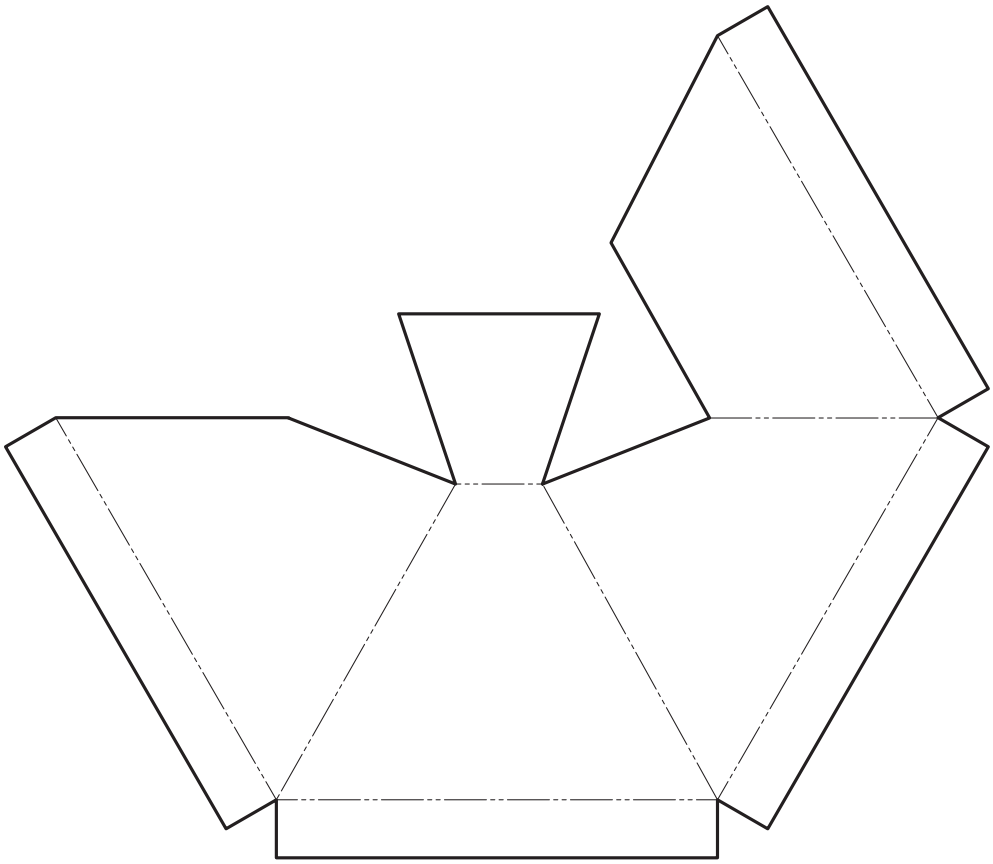

Surface development of tent fabric

1. (continued)

A plastic frame is used to support the tent fabric.

The frame is made from tubing and connecting brackets.

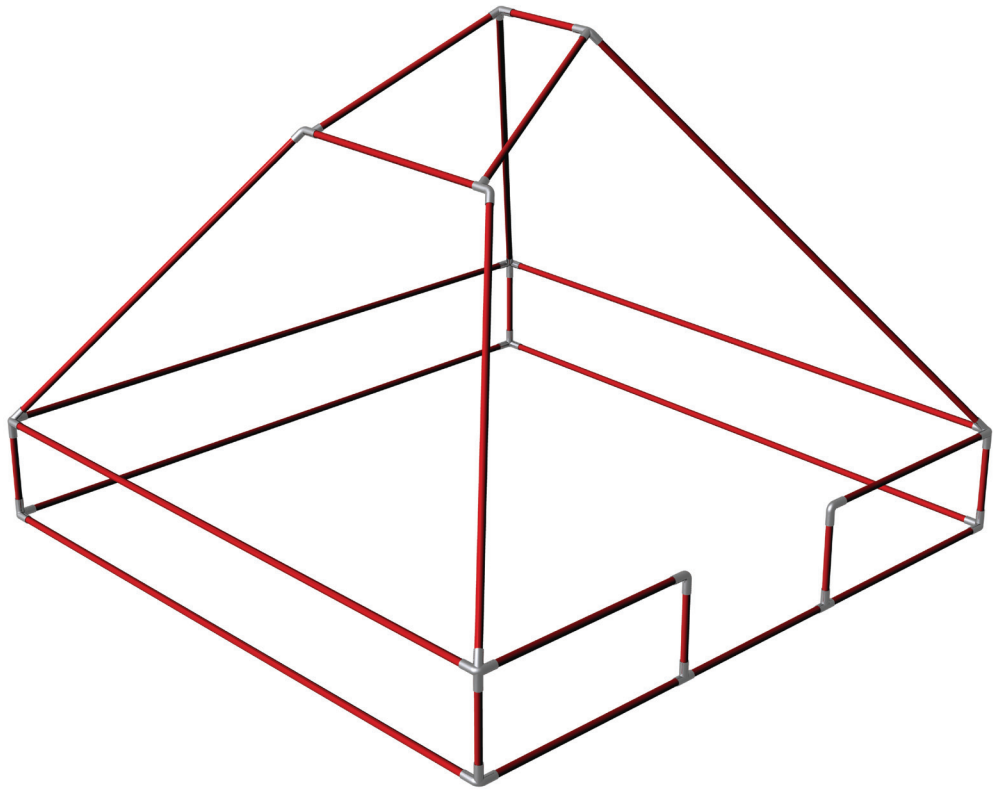

Connecting bracket and tubing for frame

1. (continued)

An incomplete parts list of brackets has been provided below.

(b) State, in the table below, the quantity of each type of connecting bracket required to assemble the frame. **4**

	Part	Quantity		Part	Quantity
Bracket 1	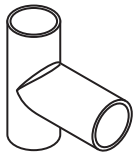	_____	**Bracket 5**	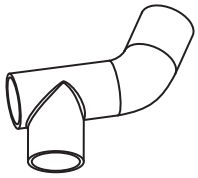	1
Bracket 2	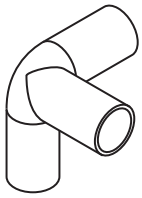	_____	**Bracket 6**	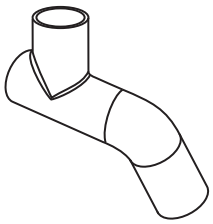	1
Bracket 3	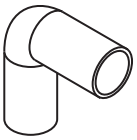	_____	**Bracket 7**	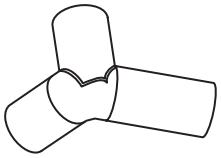	1
Bracket 4	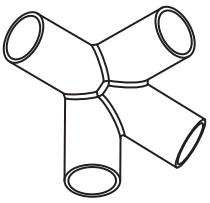	_____	**Bracket 8**	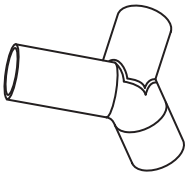	1

Total Marks **(6)**

Date to be returned:	Parental Signature:

Homework 20

1. “Cone” is a portable container for storing earphones and other cable accessories.

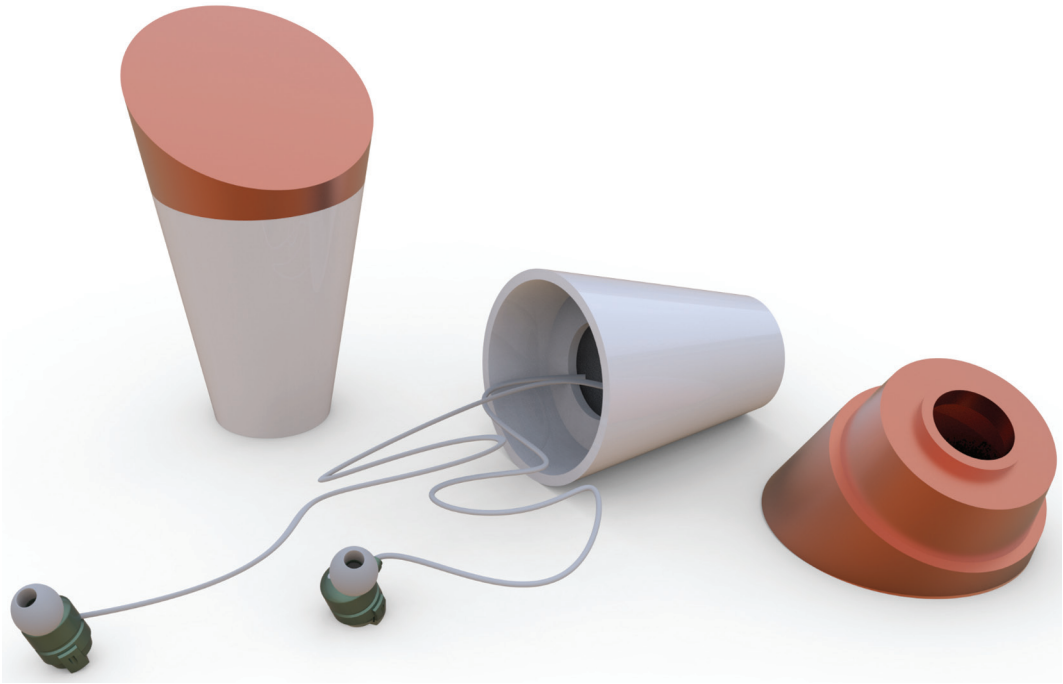

1. The lid was modelled using 3D CAD modelling software.

(a) Describe, with reference to correct dimensions and 3D CAD modelling techniques, how the lid can be produced.
You must use the drawing provided in the Supplementary Sheets for use with question 3(a).
You may use sketches to support your answer. **6**

1. (continued)

The CAD technician was asked to generate the true shape of the sloping **surface "X-X"** as indicated in the orthographic drawing.

Identify the correct true shape of the sloping **surface "X-X"** by ticking a box below. **1**

You must use the drawing provided in the Supplementary Sheets for use with question 3(b).

You may use a ruler, compass or trammel for measuring.

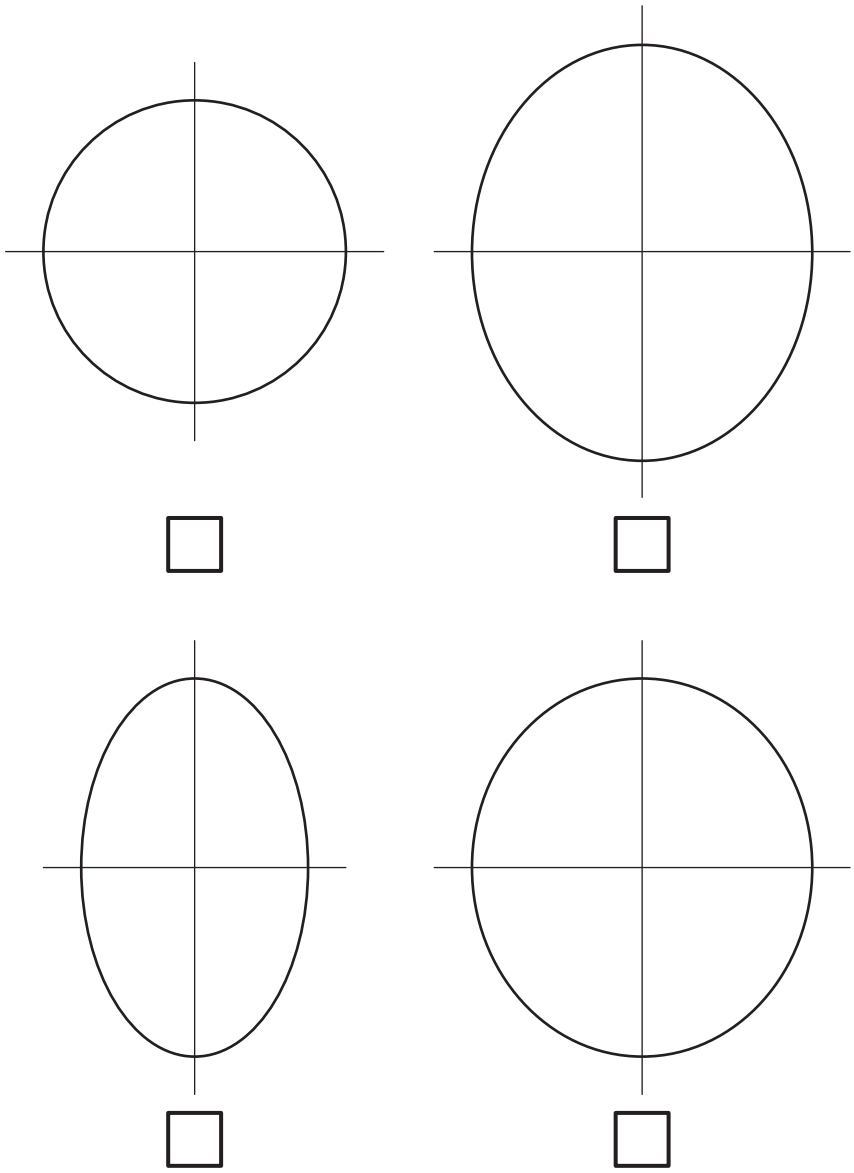

1. **(continued)**

The designer added details to the sloping surface of the lid. The detail consisted of four identical shapes positioned around the centre and raised from the surface.

The initial sketch of one of these shapes is shown in **bold** black. The additional shapes in red were then created using 2D CAD editing commands.

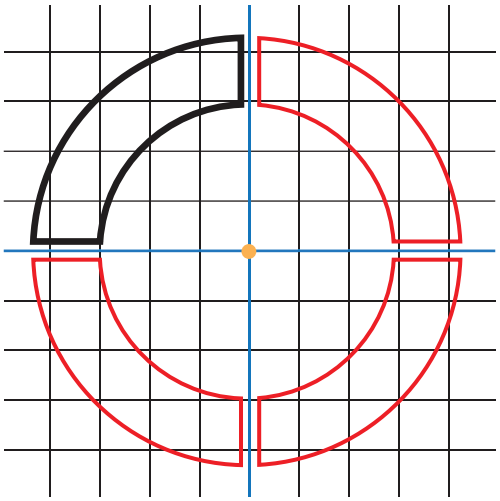

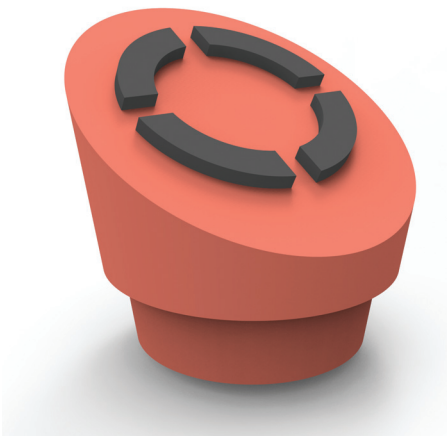

(c) Describe, with reference to **2D CAD editing** commands, how the CAD technician has repeated the shape without having to redraw each shape again. **2**

You may use sketches to support your answer.

1. (continued)

The CAD technician extruded the detail on the sloping surface of the lid but also wanted this feature to be shelled along with the other features.

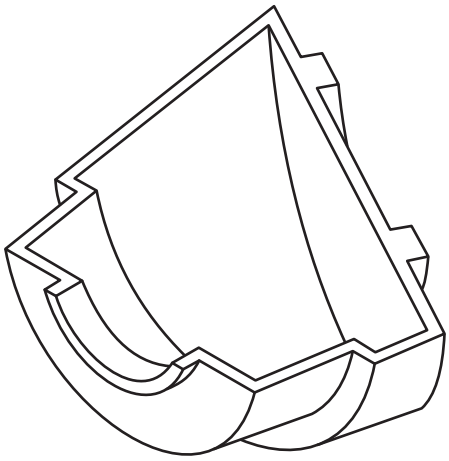

Before

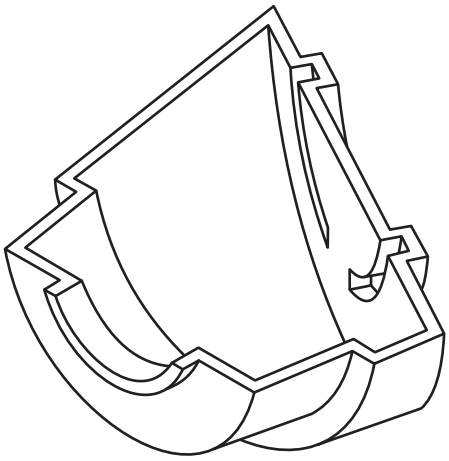

After

(d) Explain how the model could be updated to include the additional shell details. **2**

1. (continued)

The lid and main body of "Cone" were assembled using 3D CAD modelling software.

(e) Indicate by **shading** the relevant **surfaces** and state using 3D CAD terms how you would insert the lid into the body. **3**
Stage one has been shaded for you.

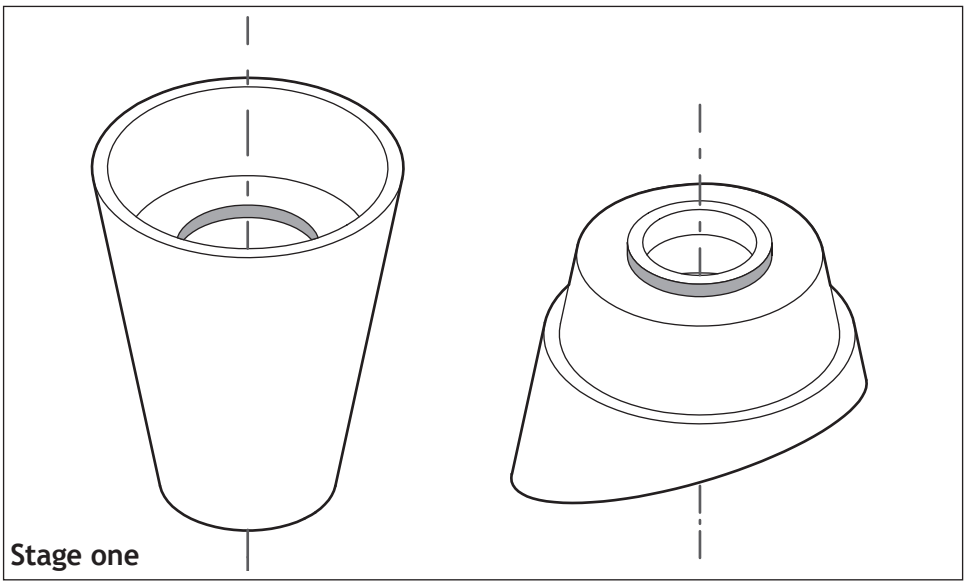

Constraint used

_____

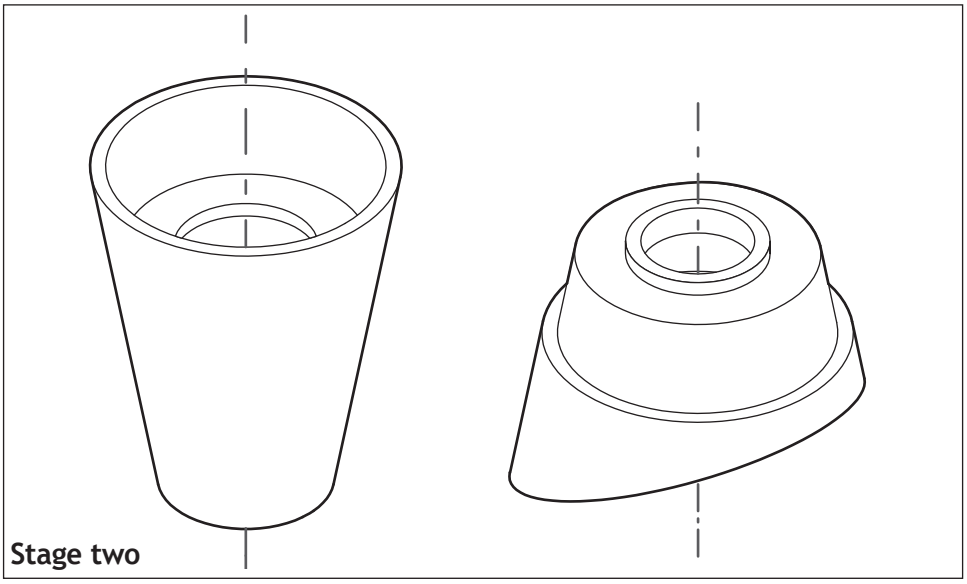

Constraint used

Total (14)

_____

Date to be returned:	Parental Signature:

Supplementary Sheet for use with Questions 3 (a) and (b)

The orthographic drawing for the lid is shown below.

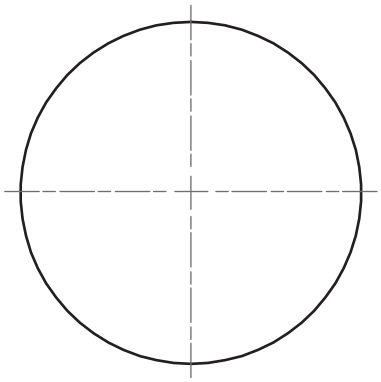

PLAN

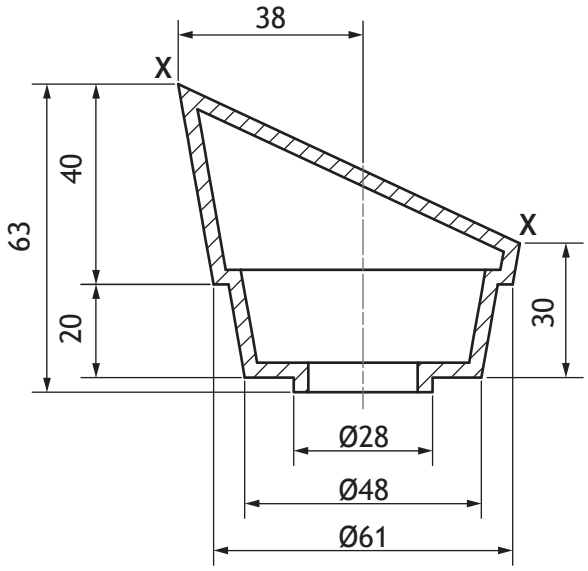

SECTIONAL END ELEVATION A-A

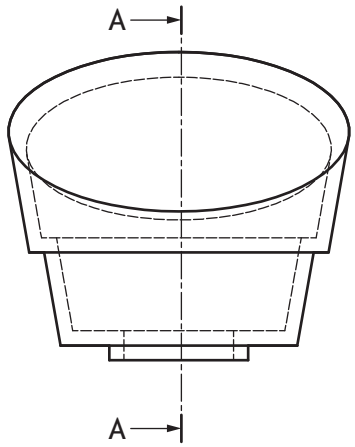

ELEVATION

NOTE:
WALL THICKNESS 3MM
HIDDEN DETAIL OMITTED FROM
PLAN FOR CLARITY

1.

The CAD technician produced a floor plan and enlarged detail of the lodge.

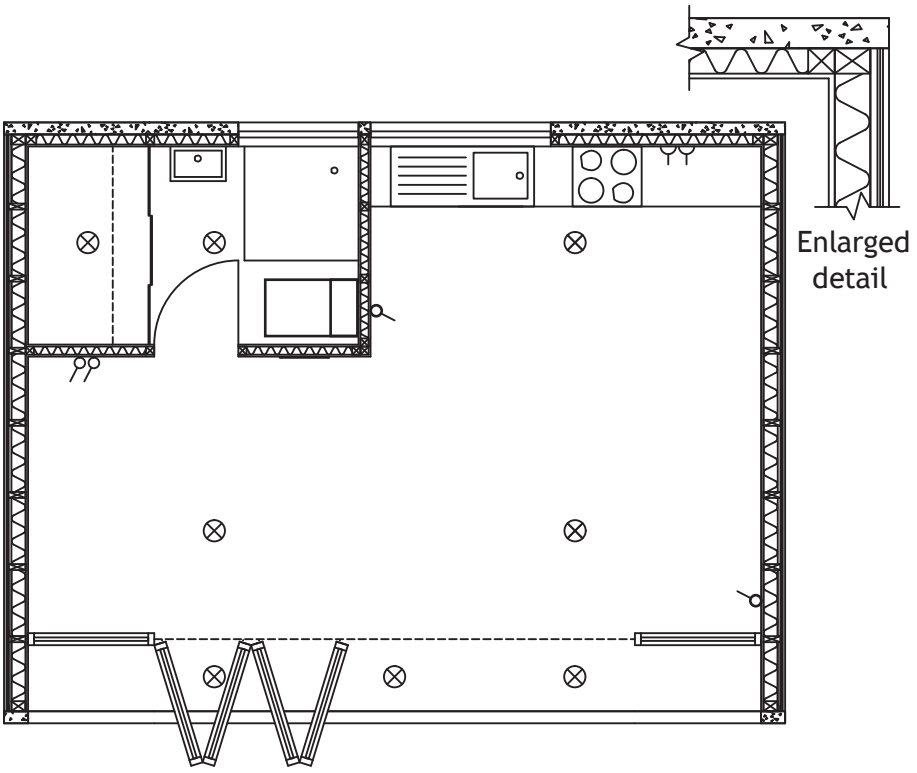

(d) State the names of the building drawing symbols shown below. **4**

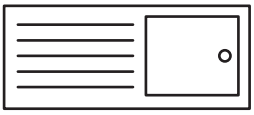

_____

_____

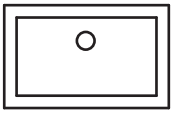

_____

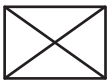

_____

2.

In addition to their standard lodge, "Terra", offer a premium range of lodges. These use modular components that allow the owners to create their own unique layout.

Elevations for three different lodge designs, A, B, and C are shown below.

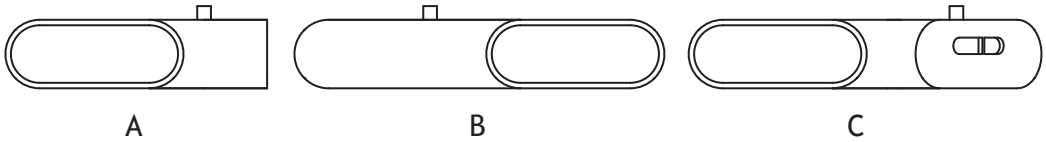

(i) Identify the correct pictorial view for each of the elevations above by marking **A**, **B** or **C** in the appropriate box below. You should select only one pictorial for each of the elevations. **3**

There is only one correct answer for each elevation.

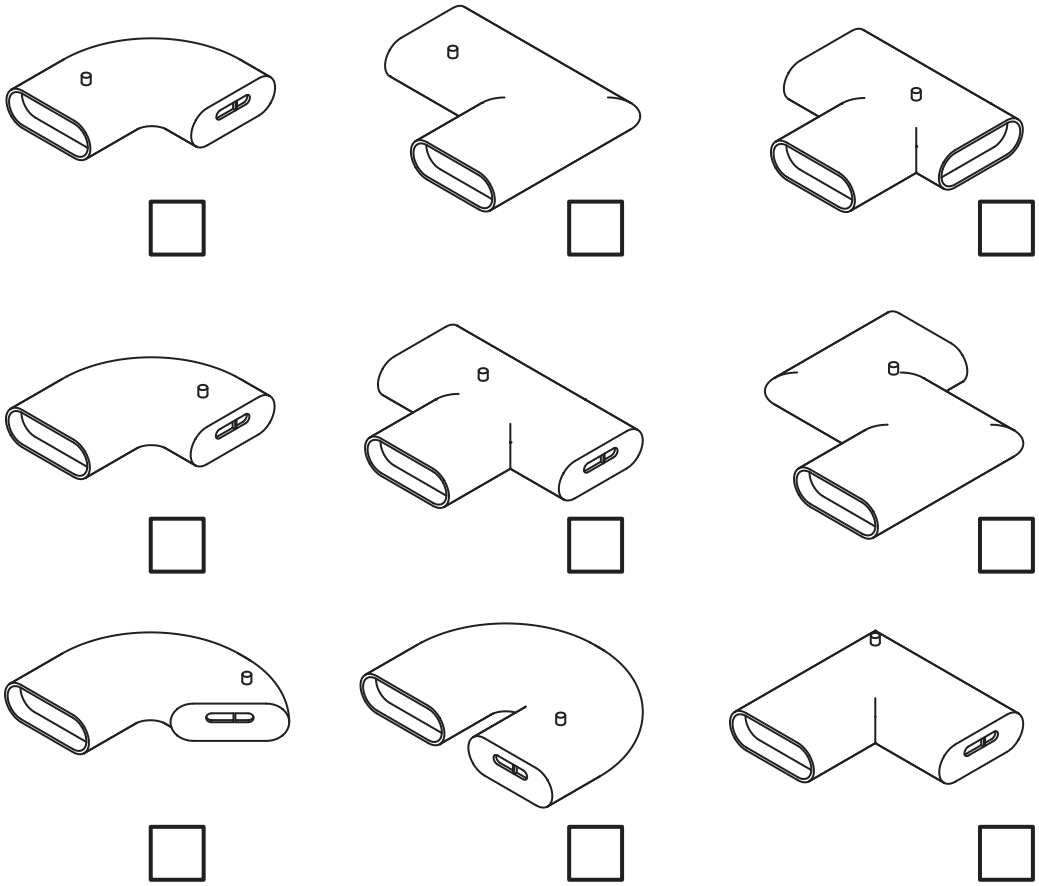

Total (7)

Date to be returned:	Parental Signature:

1.

The CAD technician produced pictorial line drawings of the front and rear of the lodge.

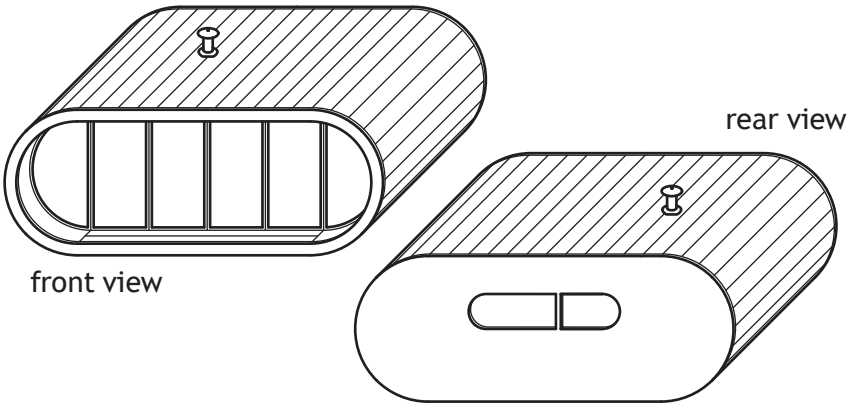

(a) (i) State the type of pictorial line drawings shown above. **1**

_____

(ii) Explain why this type of view would be used. **1**

_____

_____

1. (continued)

The CAD technician produced a site plan as part of the construction project and wishes to calculate the position of the lodge in relation to the plot boundary. The front of the lodge faces onto Birch Crescent.

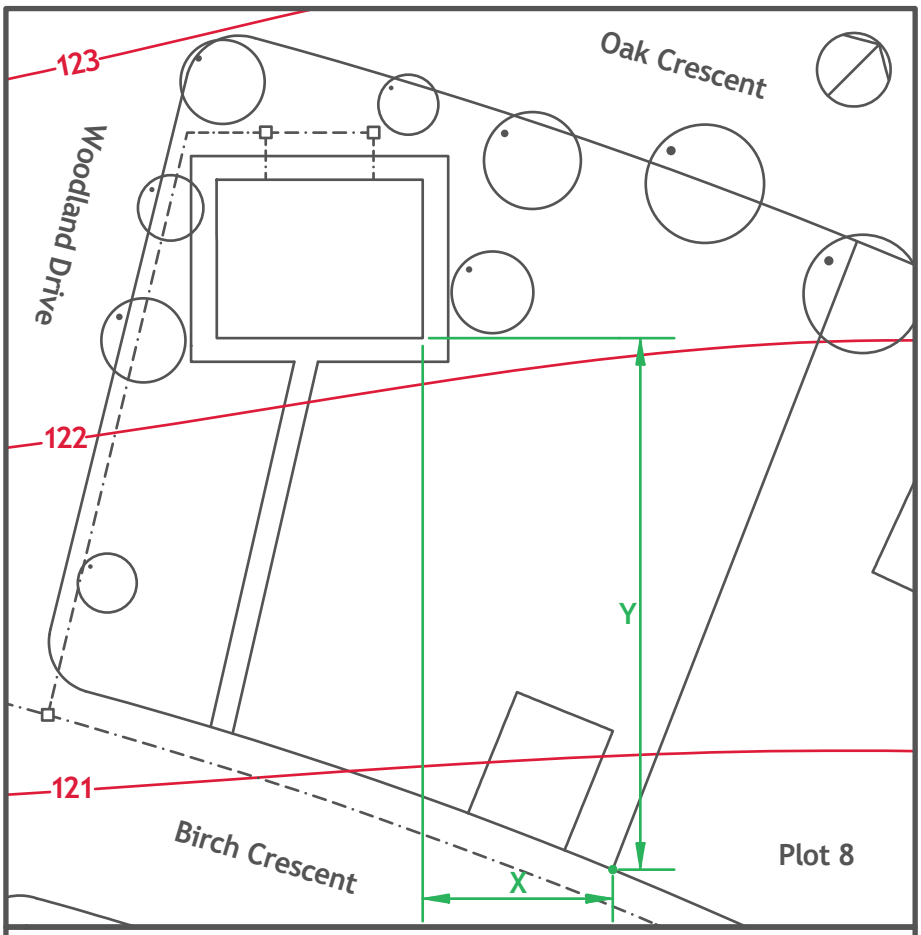

Site Plan – Plot 6 Birch Crescent, Woodland Lodges Holiday Park. Scale 1:200

(b) State the name of the features drawn in red on the site plan. **1**

_____

(c) State the direction that the front of the lodge faces. **1**

_____

Total (4)

Date to be returned:	Parental Signature:

Homework 23

1. "(S)TABLE" is a flat-pack stool/table designed using 3D CAD modelling software. A promotional graphic that includes a 3D CAD illustration of the product is shown below.
   You should refer to the **Supplementary Sheets for use with Question 5** before answering all parts of this question.

1. (continued)

(d) Identify the **two** correct pictorial views of the product by ticking (✓) two boxes below. **2**

You should refer to the **Supplementary Sheets for use with Question 5.**

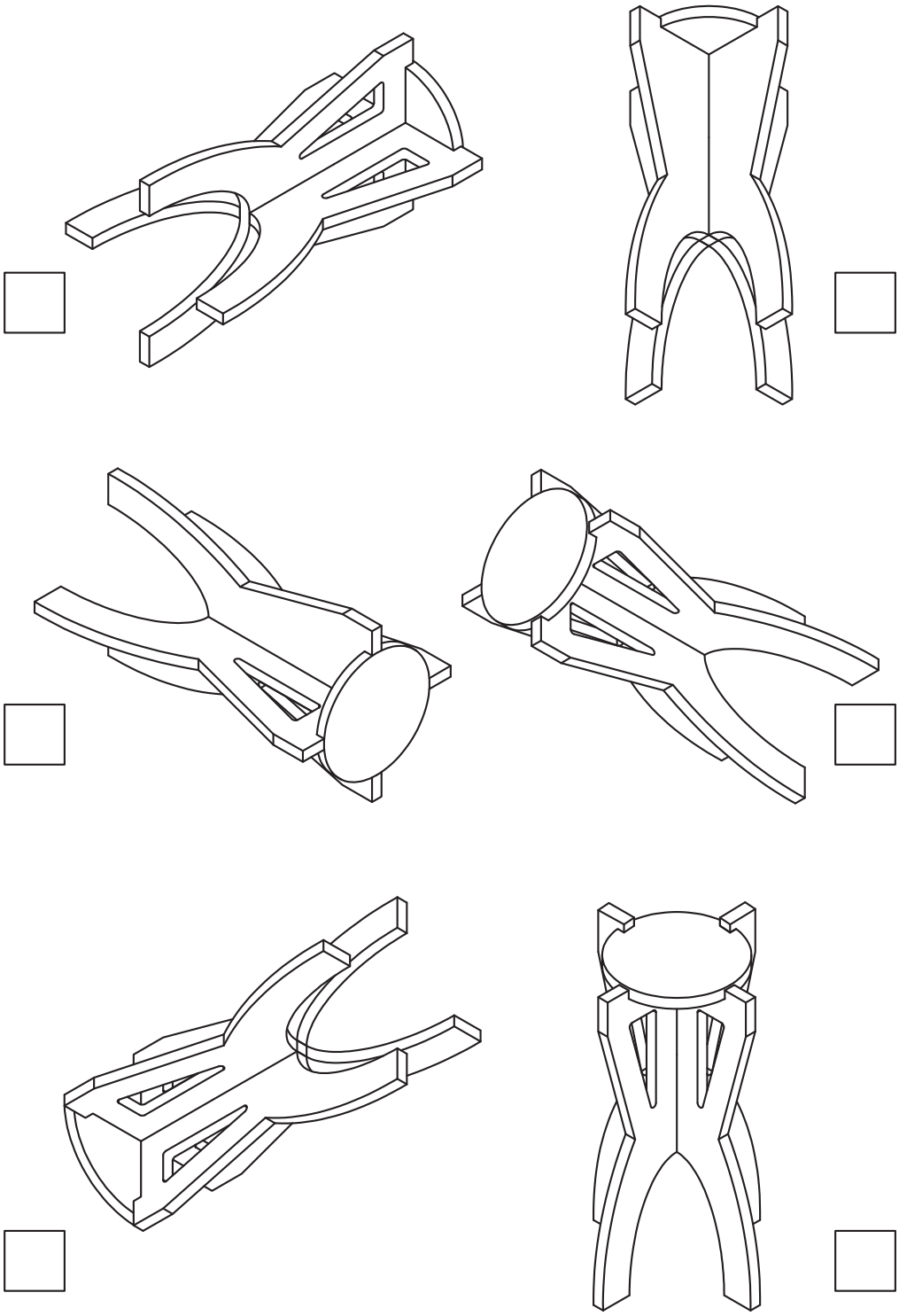

Total (2)

Date to be returned:	Parental Signature:

1. The symbols shown on the previous page can be stored in a CAD Library.

i) Explain what a CAD Library is? (1)

_____

_____

ii) State two advantages of using a CAD library. (2)

1. _____

_____

2. _____

_____

2. Plans are used by architects to show different features and symbols. State the name of the plan types shown at H, I and J.

H

H _____ (1)

I _____ (1)

J _____ (1)

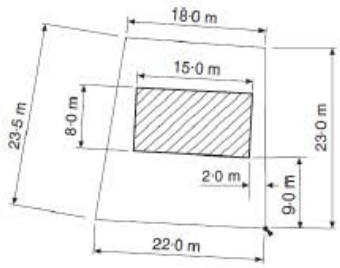

I

Name the symbol X

_____ (1)

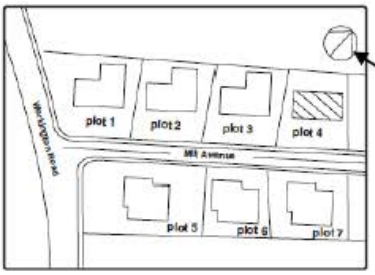

X

What scale would be suitable for plan J. Please circle the correct answer. (1)

1:10 1:50 1:200 1:1250

J

Total (8)

Date to be returned:	Parental Signature:

3. "Colour Hive" is an educational toy designed to teach children about colour mixing. Each toy is a hexagonal tile that emits a primary colour. The colour is controlled through the use of a smartphone app.

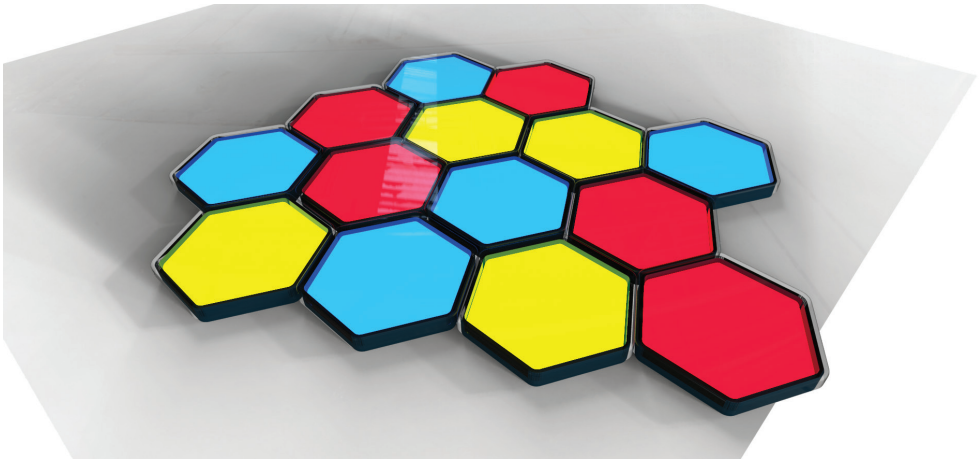

The tiles are designed to be stackable. When a second coloured tile is stacked on top of the first, the colours of each tile are mixed to produce a secondary colour.

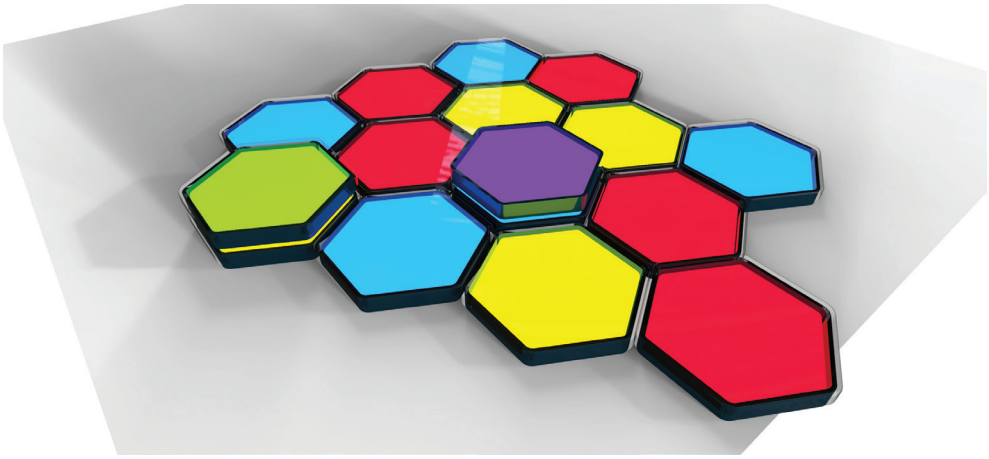

(a) Complete the table below to show the top tile and resultant colours. **3**

Bottom Tile	Top Tile	Resultant Colour
Red	Yellow	
Yellow		Green
Blue		Violet

1. **(continued)**

The smartphone app used to control the tiles is shown below.

(b) The tints and shades of the tiles can also be controlled by using the smartphone app.

State how to create a shade of a colour. **1**

_____

_____

(c) Contrasting colours were used in the colour scheme of this smartphone app.

Explain why **contrast** is important in the design of the smartphone app. **1**

_____

_____

_____

Total (5)

Date to be returned:	Parental Signature:

Homework 26

1. A sports shop is wanting to present a new range of running shoe. They employed a graphic designer to develop a new display stand. An illustration of their design is shown below.

The graphic designer used 3D CAD to model the display stand.

a. Describe two advantages of using 3D CAD to model the display stand. 2

The stand will be made from sheet-metal. An orthographic drawing of the display stand is shown below.

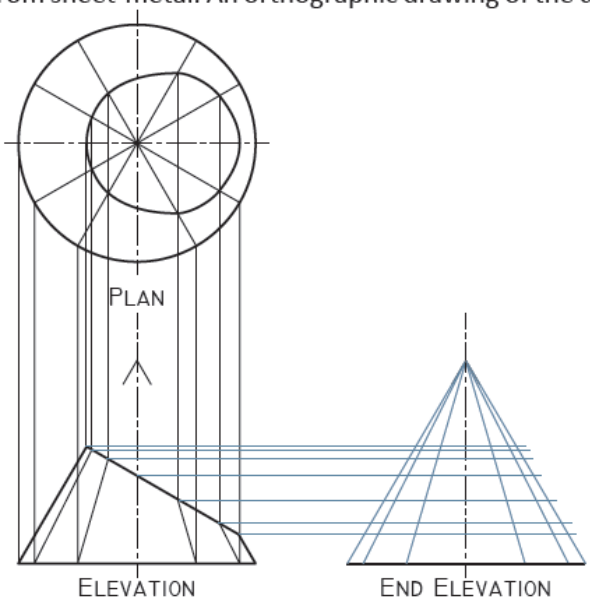

b. Complete the End Elevation of the orthographic drawing by sketching upon the generators provided. 6

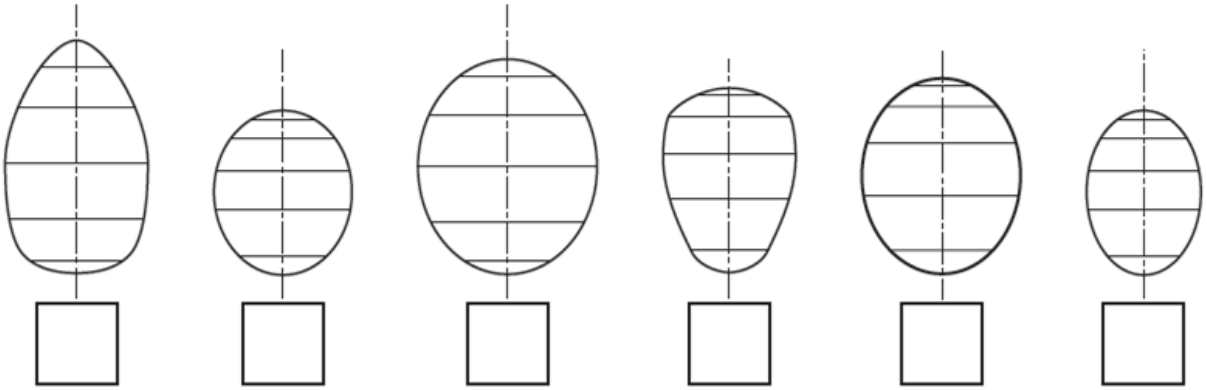

c. Identify the correct 'True Shape' for the display stand top, by ticking the correct box **1**

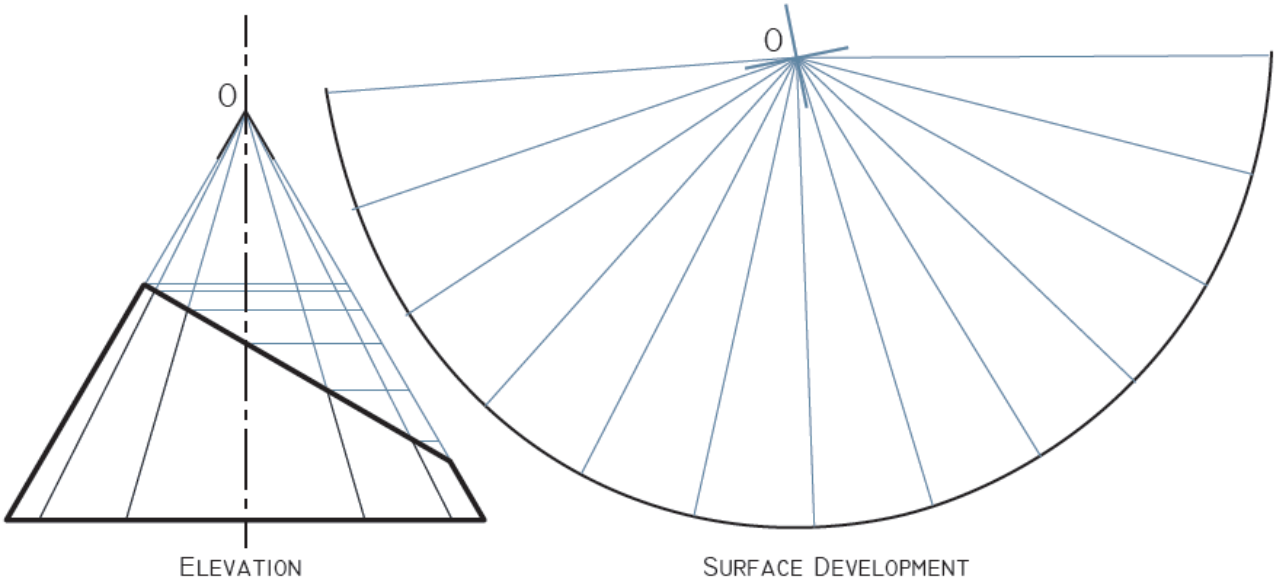

d. Complete the Surface Development of the display stand by sketching upon the generators provided above. The Surface Development must start from the shortest edge. **2**

Total (11)

Date to be returned:	Parental Signature:

A pictorial view and elevation of a new tent peg design are given below. Add the following dimensions to the tent peg:
NOTE: The drawings are not to scale.

- Length of edge **X** **140mm**
- Length of edge **Y** **85 mm**
- Diameter of **Z** **17 mm**

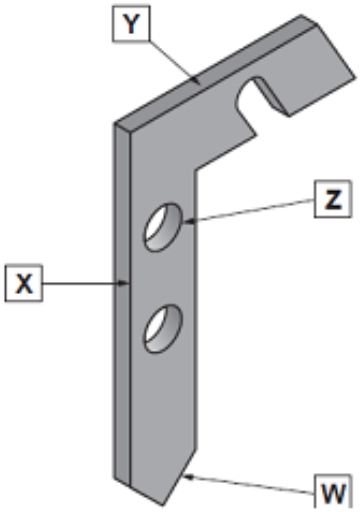

Pictorial view

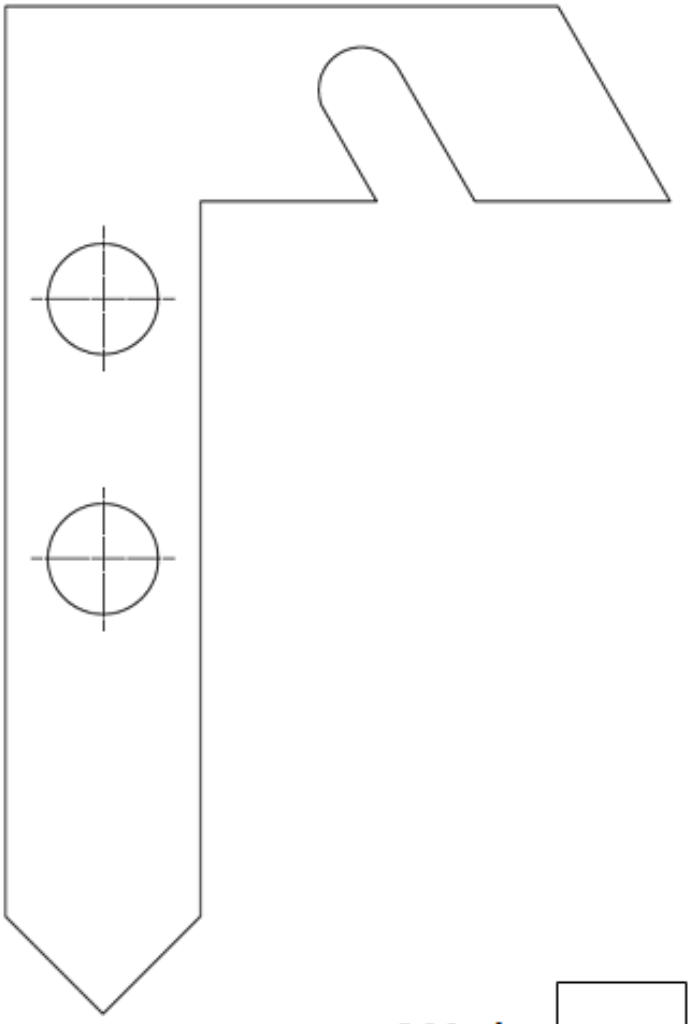

3 Marks

Date to be returned:

Parental Signature:

Homework 28

1. A graphic designer has produced three promotional layouts.

(a) (i) State one instance where alignment has been used in Layout 1. **1**

_____

_____

(ii) Describe the effect that alignment has on Layout 1. **1**

_____

_____

_____

_____

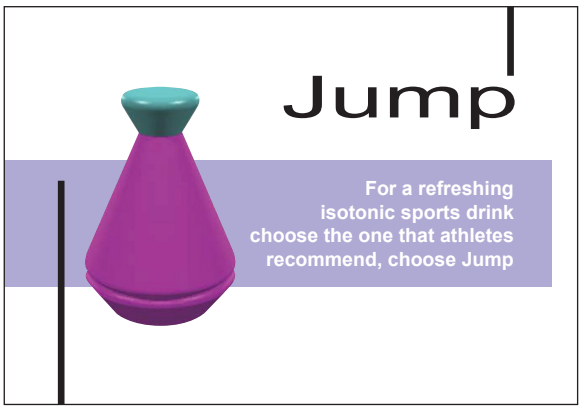

Layout 1

(b) Describe **two** ways in which the designer has created **unity** in Layout 2. **2**

_____

_____

_____

_____

_____

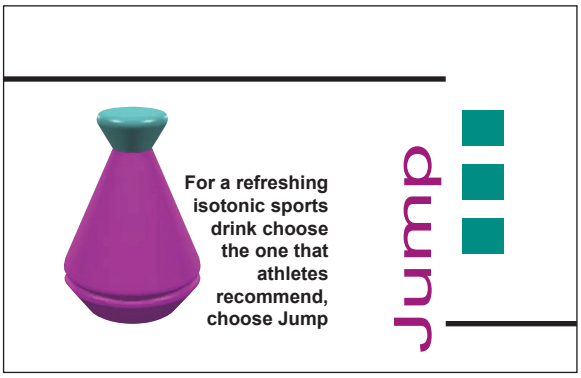

Layout 2

1. (continued)

(c) Describe **two** methods used to create contrast **in Layout 3.** **2**

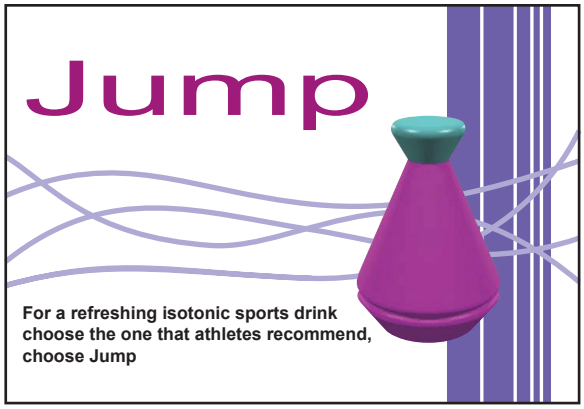

Layout 3

Early in the design process, the designer decided it was important to move the bottle away from Position 1 to Position 2 as shown below.

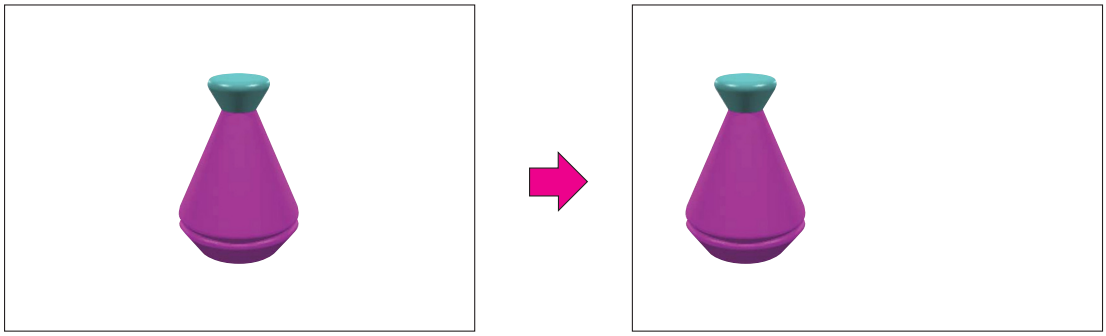

Position 1 **Position 2**

(d) State **one** reason for doing this. **1**

1. (continued)

In the final DTP layout shown opposite, the designer chose **blue** for the background colour.

(e) (i) State whether blue is an advancing or receding colour. **1**

_____

(ii) Describe the effect that the blue background colour has on the bottle. **1**

_____

The colours used on the bottle itself are shades of red and green. The designer wishes to create a more **harmonious** colour scheme on the bottle and decides to change the red shade to another colour.

(f) State a **tertiary** colour the designer should try instead of red. **1**

_____

The 'Jump' promotion will be published in a magazine and caring for the environment is important to the magazine publisher.

(g) State **two** ways in which the publisher can reduce the magazine's impact on the environment. **2**

_____

_____

_____

_____

Using DTP software to produce a magazine brings many benefits to the publishing industry and its workforce.

(h) State **one** benefit that DTP has brought to the publishing industry (other than environmental benefits). **1**

_____

Total marks 13

1. (continued)

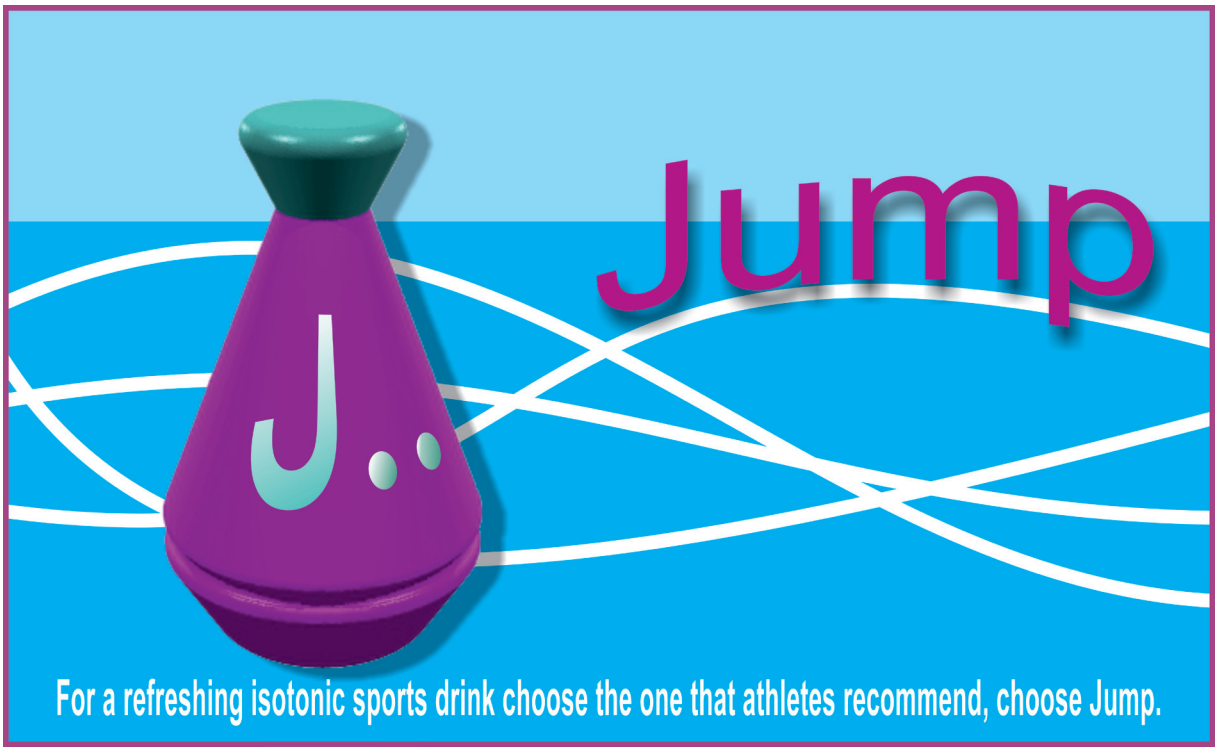

Final layout

Date to be returned:	Parental Signature:

Homework 29

1. CAD production drawings for the manufacture of a plastic fixing clip are shown below.

   The drawings were to be produced in accordance with British Standards conventions but they are not correct.

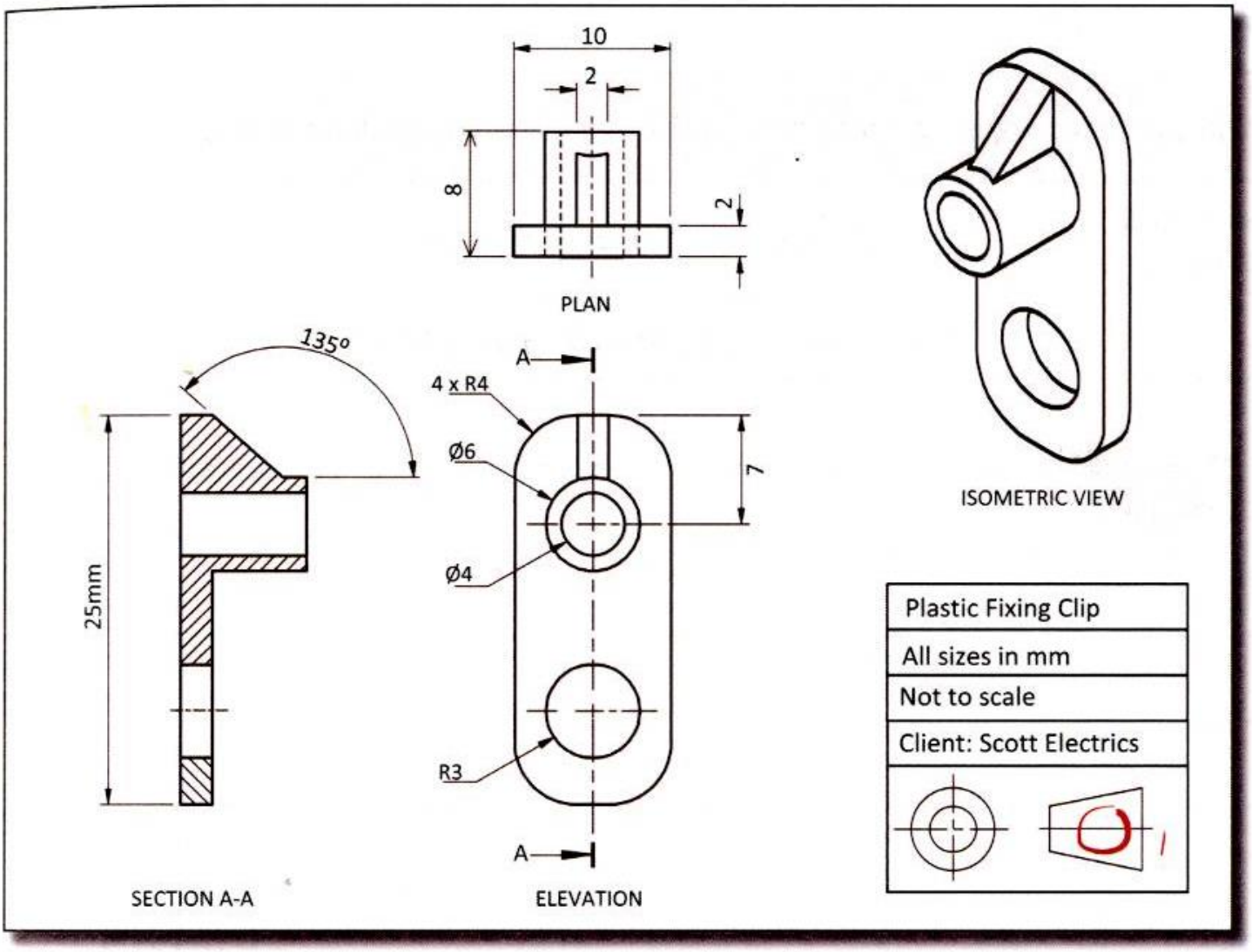

To enable the manufacture of the clip, the production drawings require one more dimension, dimension 'X'.

(a) Identify this missing dimension and add it to an orthographic view. There is no need to add the size, just show the leader and dimension lines and put an 'X' in place of the size. Apply the correct drawing standards.

2

1. (continued)

(b) Identify eight British Standards drawing **errors** or **omissions** on the orthographic production drawings on Page seventy three. Circle and number each error on the drawing and describe each error in the table below. An example has been given.

8

Table of British Standards errors and omissions in the fixing clip production drawing	
Your numbered error or omission	Description of error or omission
1	This should be a centre line, not a solid line.

The clip drawings were produced using 3D CAD modelling software. The plastic clip will be used inside a flatscreen TV which is being designed and assembled in Scotland.

All of the components are made in a factory in China before being shipped over to Scotland.

(b) Describe tow ways in which **CAD models** and **drawing standards** can make this **international work** easier.

CAD Models:

_____ 1

_____

Drawing Standards:

_____ 1

_____ Total (12)

Date to be returned:	Parental Signature:

Homework 30

1. In the table below fill in the missing part of each table. (6)

Line Types	What it looks like...
Construction Line	
Outline	
Folding Line	
	B B

2.

The newsletter shown is handed out in the local community, every month the template shown below is used.

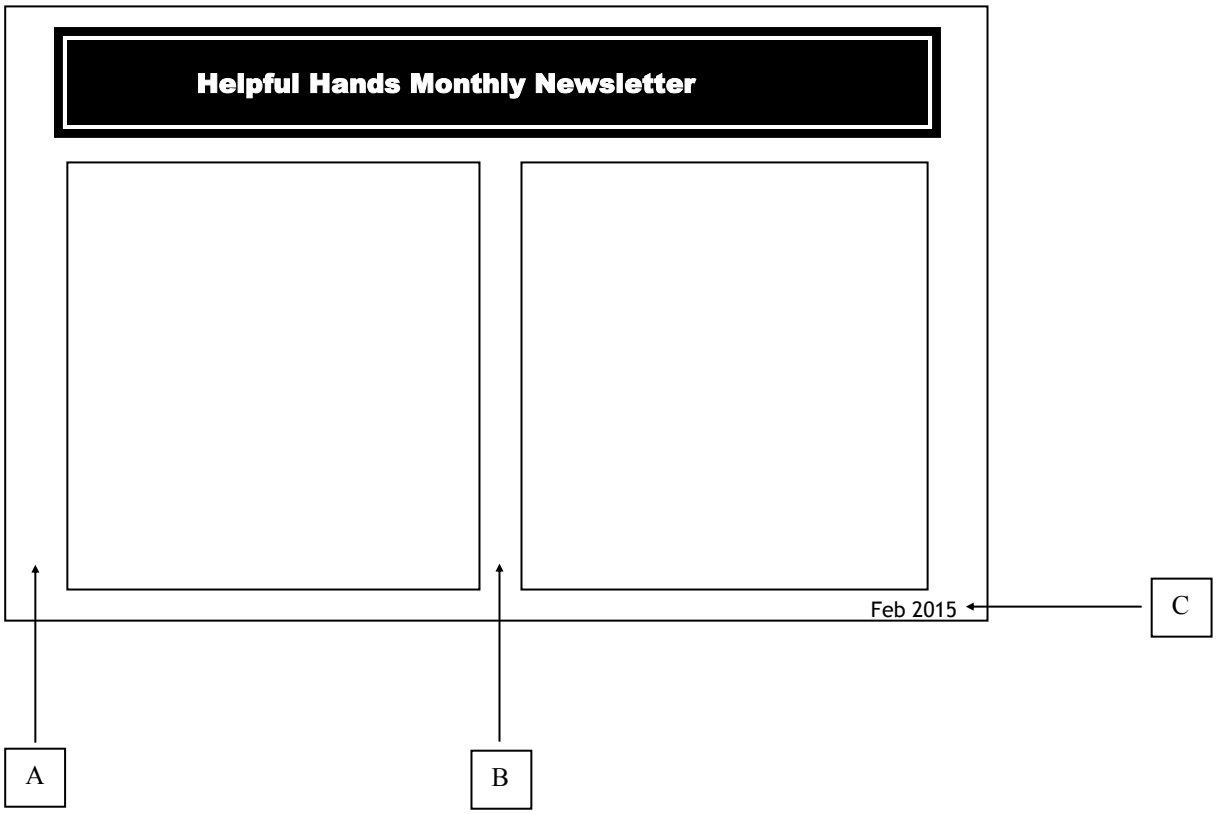

a). State the name of the type of software package used to create the newsletter shown. (1)

b). What orientation is the News letter shown?

(1)

_____

c). How many columns are shown? (1)

4. State the name of the features labelled A-C.

A _____

B _____

C _____

(3)

Total (12)

Date to be returned:	Parental Signature: