Measured Perspective - Information Sheet 4

Example 2 - Garden Shed

In this example the PP is behind the object and so the resulting view will be enlarged compared to the size of the plan. Again the drawing is laid out with a scaled plan and a spectator point selected. The ground level and eye level have also been set. The projected plan method can now be applied to produce the perspective view.

Drawing Set Up

From the spectator point project lines parallel to the front faces of the shed until they cross the **PP** at V_1 and V_2. Project these points vertically to meet the eye level line to locate vanishing points VP_1 and VP_2.

Extend the leading edges of the plan until they meet the **PP** at H_1 and H_2. Project these points vertically to locate height lines HL_1 and HL_2, the height lines should be extended far enough so that all the heights from the elevation can be marked off.

There will normally be four marks available in the exam to set out the page with vanishing points and height lines. These lines and points should be labelled clearly as in **Figure 1**.

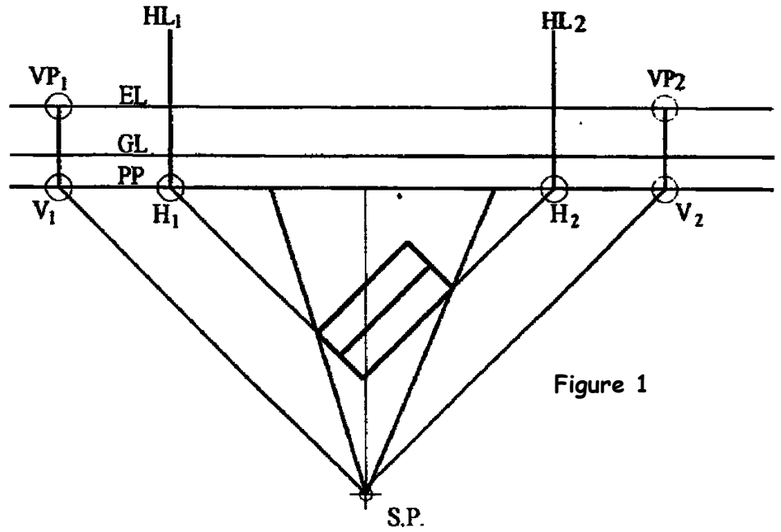

Figure 1

Construction Lines For the Front of the Shed

In this example (see Figure 2), the elevation has been drawn on top of the ground line to allow the heights to be transferred across.

From the spectator point take lines of sight through the corners on the plan to meet **PP** at **A**, **B**, and **C**. These points are then projected vertically on to the elevation. **In this example (and in many other examples), the vertical construction lines will need to be projected below the PP in order to complete the drawing**.

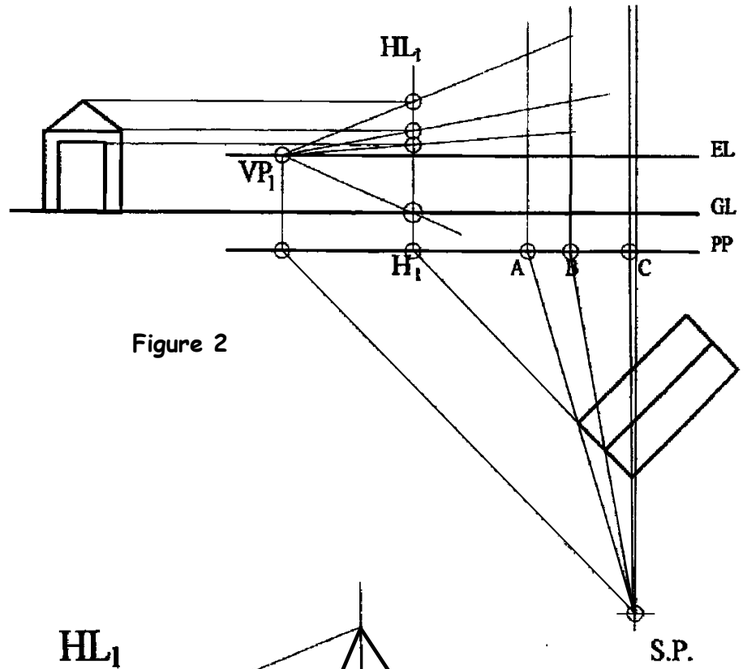

Figure 2

Lining in the Front of the Shed

To finish the front of the shed, draw lines from VP_1 through the relevant points on HL_1 (as shown in **Figure 3**). They will cross the vertical lines from **A**, **B** and **C**, now the left hand side of the shed can be lined in.

Checking Your Drawing

At this stage of the drawing it is important to get the front face of the shed drawn to scale correctly. Now is a good time to make a few checks on the drawing. One of the most common mistakes is not projecting a line from VP_1 through zero height i.e. where the height line crosses the ground line. You need to make sure you get this right as most of the objects you will be asked to draw will start at ground level.

Another common mistake is not consistently transferring heights, taken from the elevation, onto the height line starting from zero.

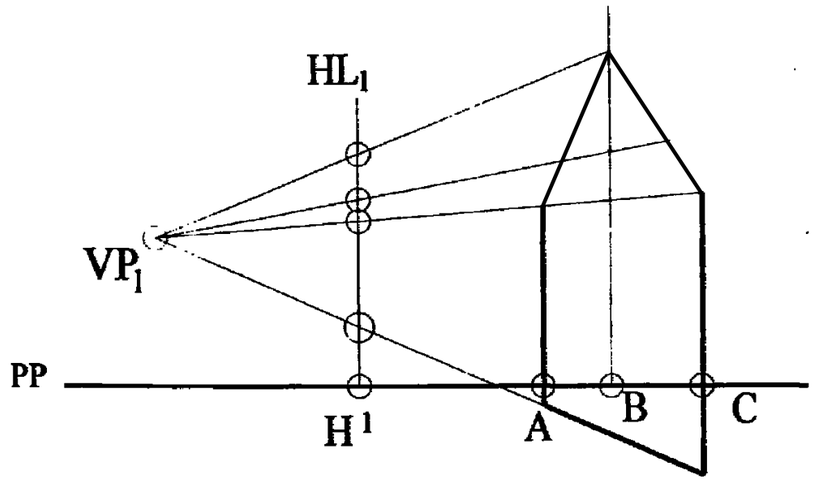

Figure 3