The Intersection of Cylinders at Angles

This situation is probably more common in real life examples of interpenetration, where not all intersecting pipe work will meet at right angles. Remember to number the generators on the small cylinder carefully, and then follow the numbers between the different views and for any developments needed.
In interpenetration exam questions you might need to; to complete the plan, draw an end elevation, draw a development of the large cylinder - showing the hole, a development of the small cylinder - showing the required cut and of course find the curve of interpenetration. Normally you would not have to do all of these solutions in one question.

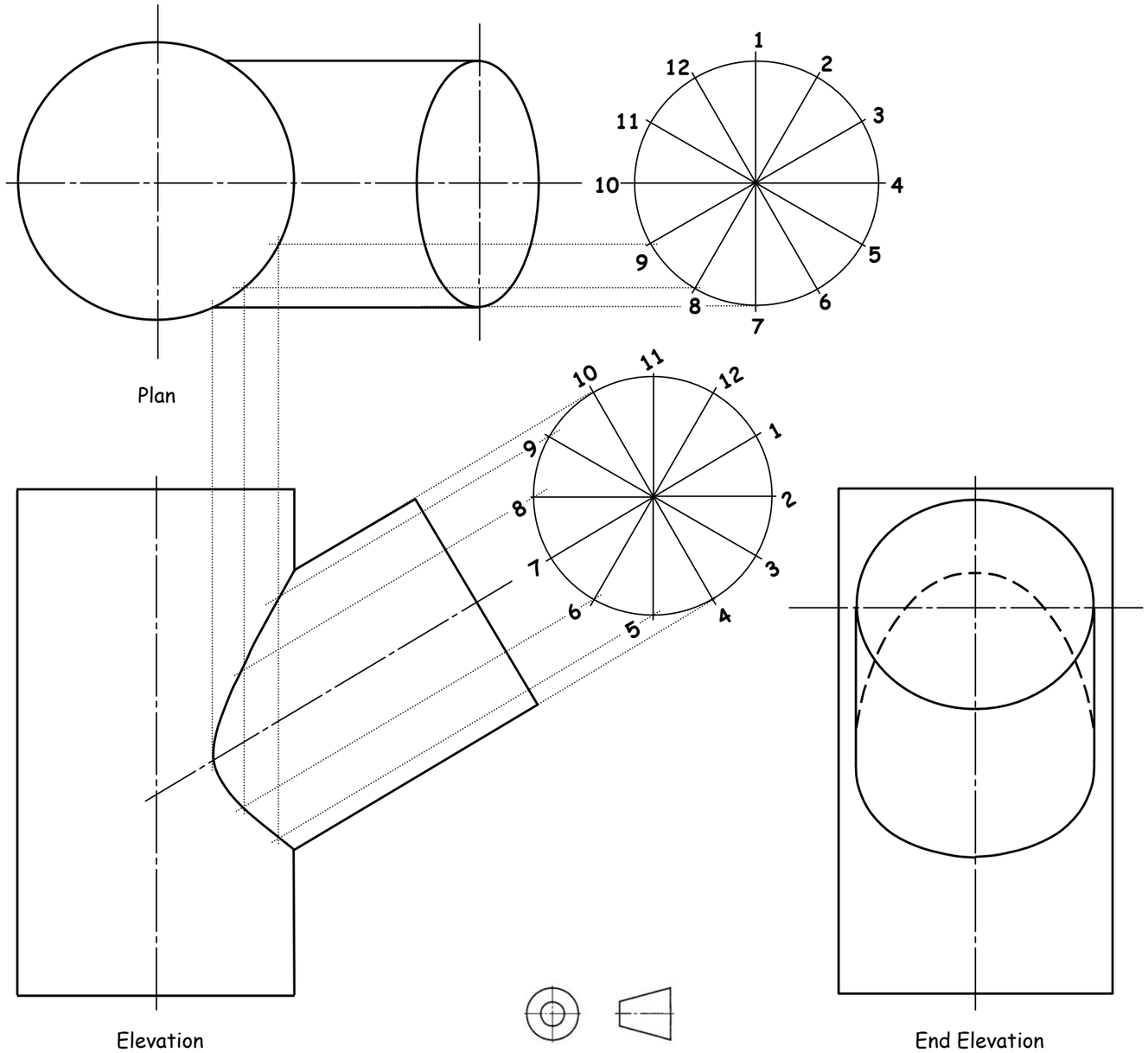

Cylinders meeting at angles

To solve these problems, draw the generators on the end elevation and on the plan, this should normally be done on the small cylinder. The plan view shows where the generators meet the large cylinder. These points are then projected down to the elevation where they meet projection lines from the same generators projected from the end elevation. Look carefully at the numbers on the views, these will show you how the lines of intersection should be joined. The curve of intersection should then lined in smoothly.

Note: In both the examples shown so far, the small cylinder meets the large one symmetrically i.e. their centre lines align. This means that the front and back curve are exactly the same and they line up, so only the front curve will be visible.

If the small cylinder is moved to one side the curves of interpenetration will be different on each side. Therefore you will have two curves to find and one will be shown with hidden detail lines.

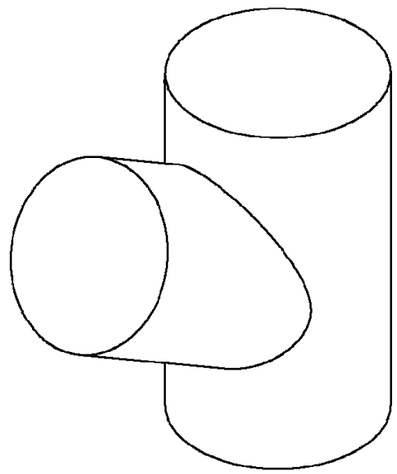

Isometric view of the intersecting cylinders