Measured Perspective - Information Sheet 1

When producing measured perspective drawings the same ideas and procedures used for estimated perspective sketching apply. Only this time, instead of guessing all the sizes you will use a scaled plan view and scaled heights which will result in an accurate, proportional view of the object. For the higher course items with curved edges will not be considered.

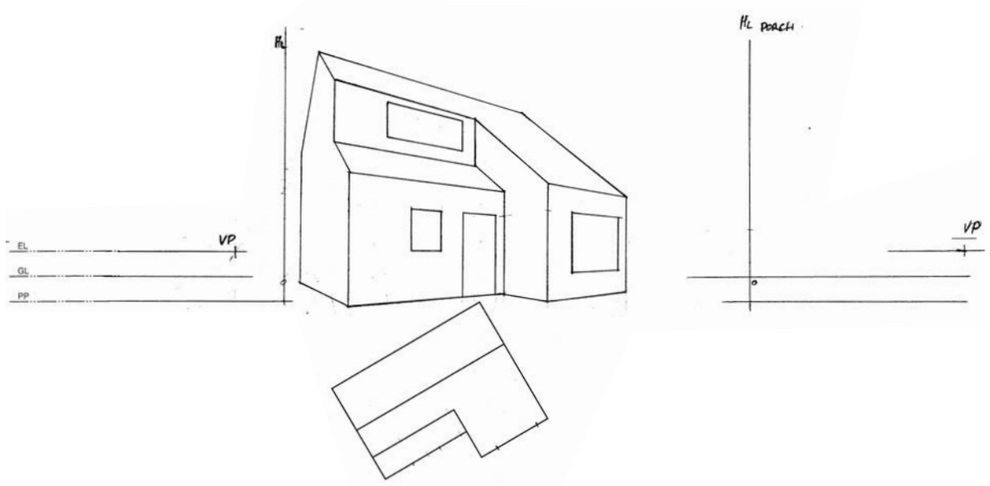

Perspective - Revision

The following list gives the criteria required for any perspective drawing;

1. The viewer's eye level will always be level with the horizon line.
2. Relationships between features on the drawing are always relative to the viewers line of vision.
3. An object appears to reduce in size and detail as it moves away from the viewer towards the horizon line.
4. Vanishing points always occur on the horizon line.
5. Objects on the drawing do not necessarily have the same vanishing point.

These rules are still required when working on measured perspective drawings, but now a method of incorporating sizes from the object is needed. The technique recommended by the exam board is the **projected plan** method. This method uses a scaled plan view and a projected plane (PP). Two worked examples are shown above, both from past papers and both worth 20 marks each.

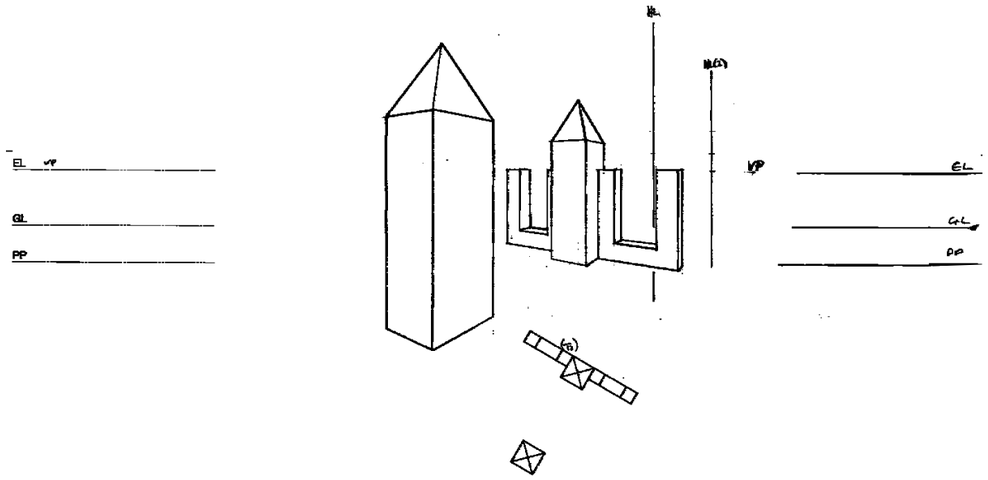

Projected Plane

The illustration, on the right, shows how the projected plane is used in perspective drawing (it is also called the picture plane). The projected plane is an imaginary vertical plane onto which the front surface of the viewed object will appear, when projected from the viewers eyes.

The pyramid of vision (see diagram) of the viewer in relation to the position of the projected plane and the viewed object will result in a reduction or enlargement of the viewed object.

Projected plane 1 in front of the viewed object - reduces the size of the image.

Projected plane 2 behind of the viewed object - enlarges the size of the image.
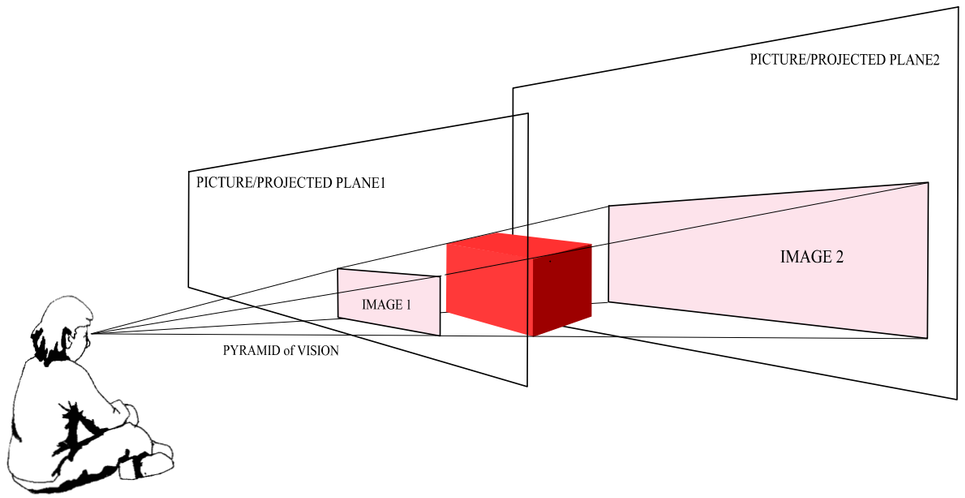
The projected plane (**PP**) will always appear on measured perspective drawings, but it will be a plan view of the plane and will show as a straight line on the page.