The Intersection of Cylinders at Right Angles

When two cylinders meet at right angles the curve that shows the join line is called the curve of interpenetration. When two cylinders or a cylinder and a prism intersect the new edge created at the join will always be curved, even although, depending on the view, it might appear to be a straight line. It is sometimes necessary to find the exact shape of this line, so that an accurate development of the hole in the large cylinder and the cut in the small cylinder (or prism) can be drawn. You need this information if the pieces are to be joined together, particularly by welding. These types of drawings would be used in the production of drainage systems, air conditioning/ventilation installations or for dust extraction installations.

Since there are no straight edges on a cylinder, compared to a hexagonal prism for example, it will be necessary to create artificial edges called generators on the intersecting cylinder. This should be a familiar technique from standard grade, when you drew generators on cones and cylinders for the development unit. When you first start to work on interpenetration examples you should always number the generators carefully and match and follow the numbers between the different views and for any developments needed.

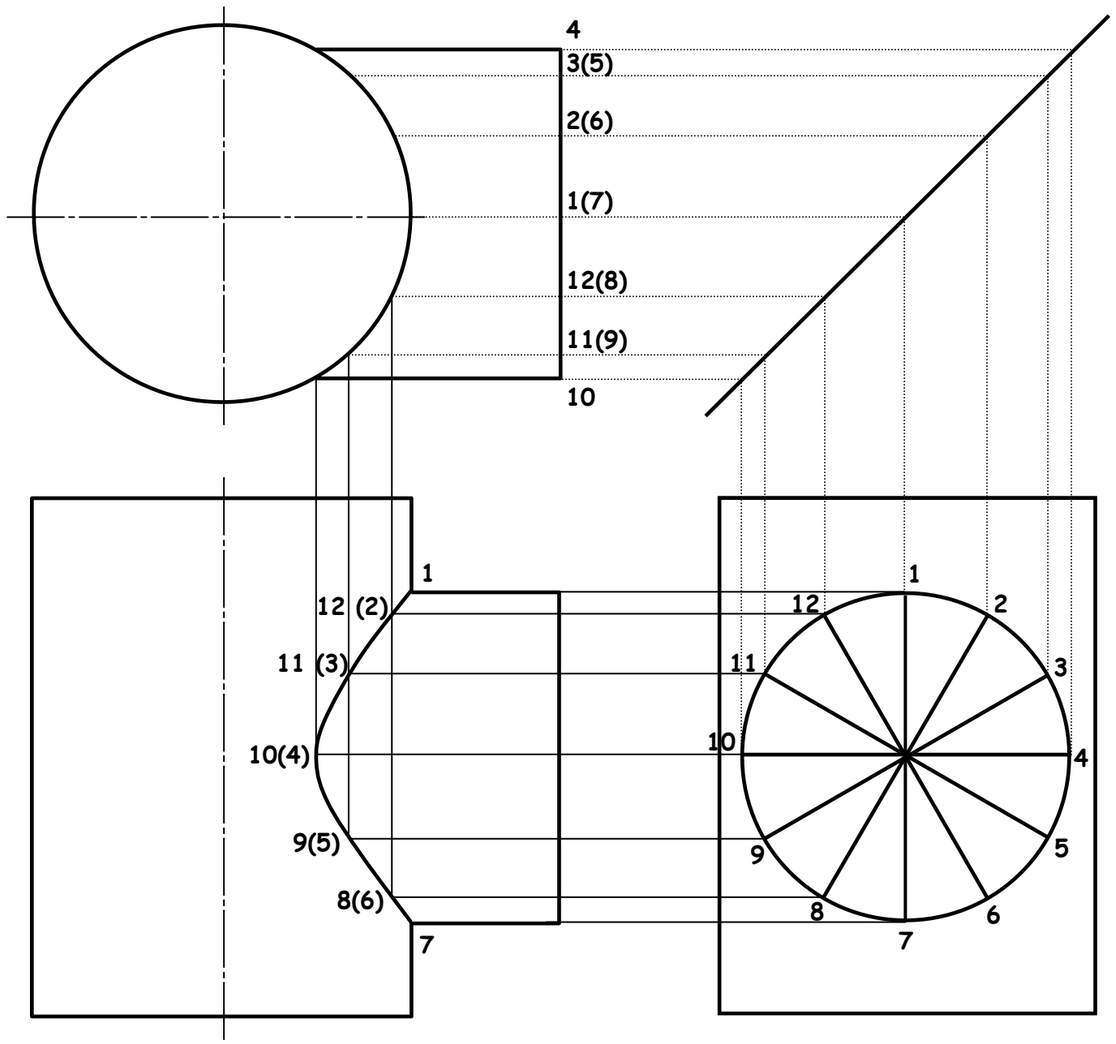

Cylinders meeting at right angles

To solve these problems, draw the generators on the end elevation and on the plan, this should normally be done on the small cylinder. The plan view shows where the generators meet the large cylinder.
These points are then projected down to the elevation where they meet projection lines from the same generators projected from the end elevation. Look carefully at the numbers on the views, these will show you how the lines of intersection should be joined. The curve of intersection should then lined in smoothly.

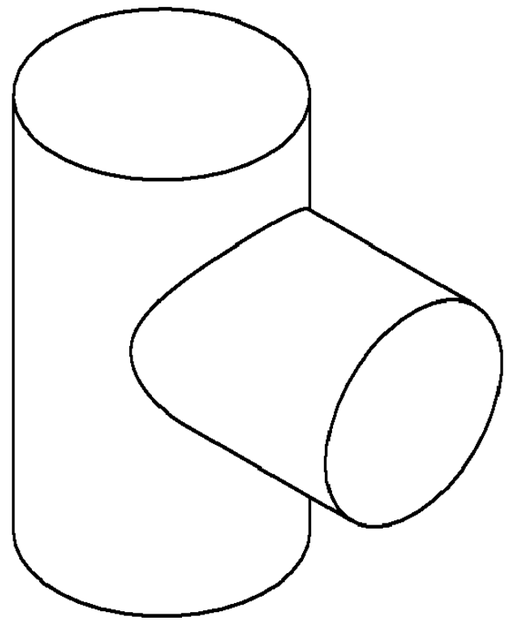

Pictorial view of pipe intersection