Tangency - Information Sheet

Most objects you use do not solely consist of flat surfaces and sharp corners. Instead they often have rounded corners and many have curved edges and profiles. Think of items like the body of an electric guitar, the shape of a computer mouse or a remote control. The profile of objects like this (possibly in more than one view) consists of arcs joining with straight lines and arcs joining with other arcs. To accurately define and draw these objects requires a knowledge of the principles of tangency. When a line is tangent to an arc (or when an arc is tangent to another arc) it means they touch at exactly one point only.

There are three basic techniques to apply when completing tangency problems, as illustrated below. One is used to join an arc and a straight line (**1**), the second to join two arcs externally (**2**) and the third to join two arcs internally (**3**). For drawings at higher level you will often have to apply these principles in combination (**4**).

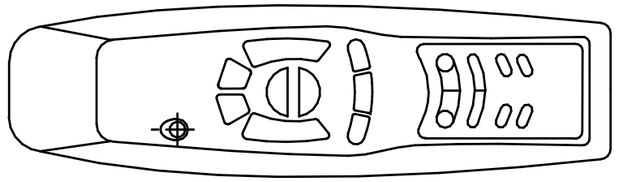

PLAN

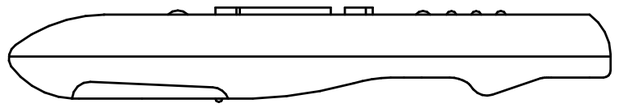

ELEVATION

(1)

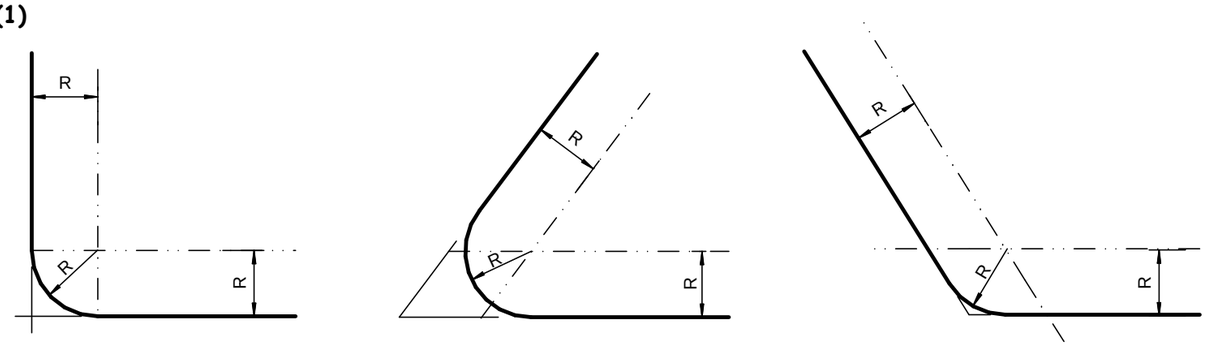

Examples of an arc (Radius R) joining straight lines meeting at different angles.

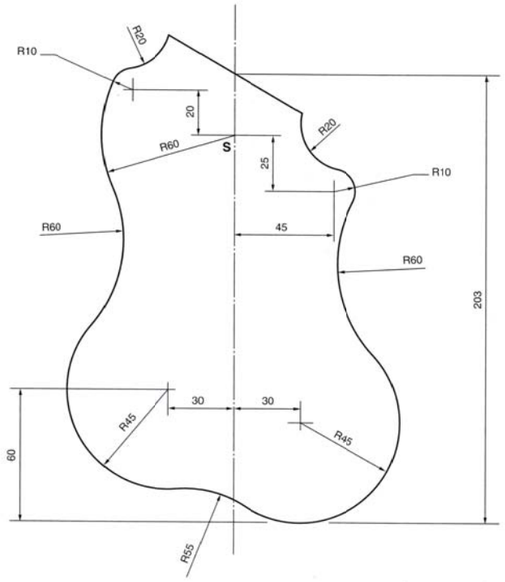

(2)

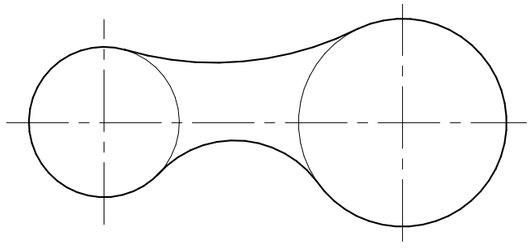

Circles tangent to arcs - externally

(3)

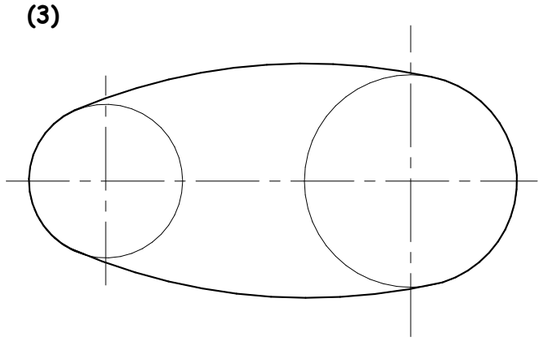

Circles tangent to arcs - internally

(4)

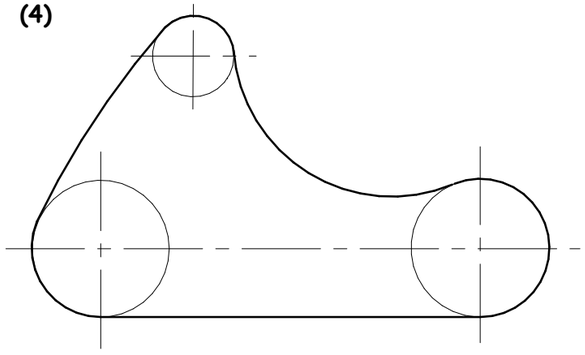

Combined example

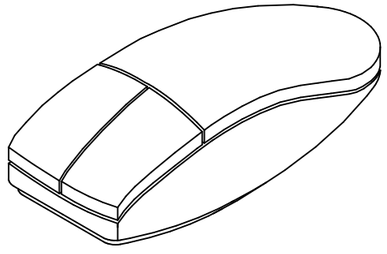

Unit - **Technical Graphics 1** Topic - **Tangency**	Higher Graphic Communication	