Measured Perspective - Information Sheet 2

The following two worked examples will step you through the process of producing a measured perspective view. The first example is set up to give a view that is reduced in size (compared to the size of the plan view), because the projection plane (PP) is in front of the object. In the second example the PP is behind the object and will result in an enlarged view of the item.

Abbreviations on perspective Drawings

To save time when producing measured perspective views the following abbreviations are use on the drawings;

SP - Spectator point/position	**PP - Projection Plane**	**GL - Ground Line**
EL - Eye Level	**VP - Vanishing Point**	**HL - Height Line**

These features always need labelled carefully and accurately on the drawings.

Example 1 - Stepped Block

Drawing Layout

Three orthographic views of a block are shown in **Figure 1**, you need at least two views to create a measured perspective drawing. To lay out the drawing, the plan view is drawn at an angle to the horizontal and a suitable spectator point is selected **Figure 2**. The position of the projected plane, in relation to the spectator point, will determine the size of the perspective view. In this case, since the projection plane is in front of the object there will be a reduction in the size of the final view, compared to the size of the plan view. (Look back at Information Sheet 1 to see why this happens). The projection plane will always appear as a horizontal line (**PP**) in the plan view.

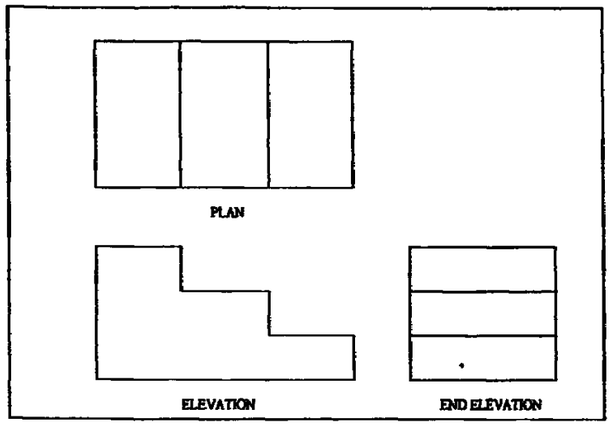

Figure 1

Drawing Set Up

The ground line is drawn, parallel to the projection plane, and represents the base of the elevation, or zero height on the drawing.
The eye level is drawn above the ground line, again it is a horizontal line. The eye level represents the height of the spectators viewpoint. In other words, the measured perspective view for a five year old child would be very different from the view of a fully grown adult.

In practice, in the final exam and for the unit drawings, the page will be set out for you, or you will be given information to locate the elements you need to complete the drawing. This is to ensure the final view will fit onto the page correctly.

To find the vanishing points, lines are drawn form the spectator point, parallel to the front edges of the block, until the meet the projection plane, at $\mathbf{V_1}$ and $\mathbf{V_2}$. Vertical lines are drawn from here up to intersect the eye level line. These two vertical lines will locate the vanishing points, $\mathbf{VP_1}$ and $\mathbf{VP_2}$, needed for the perspective drawing. Next, the front edges of the block are extended back to the projection plane, in this case since the projection plane intersects the front corner of the bock, these line meet up at $\mathbf{H_1}$. At the point where they cross the projection plane a vertical line is drawn, this is the height line, $\mathbf{HL_1}$. The heights taken from the elevation will be marked off onto the height line and used to construct the measured perspective view.

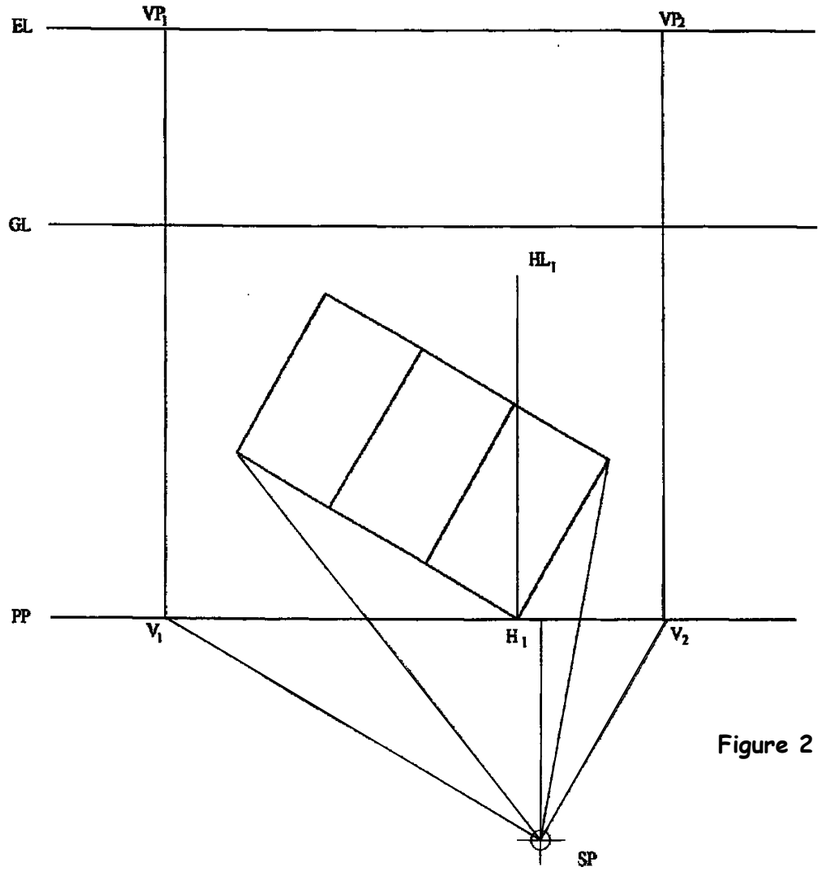

Figure 2