Instructions for Drawing Metric Nuts and Bolts

These instructions are a step by step guide for drawing nuts and bolts, use them to draw the M30 (M = Metric) nut and bolt as shown. Then you can use this sheet to help you complete the nuts and bolts for the unit drawings.
Draw an M30 nut, bolt and washer to British standards.

1. M30 bolt = Ø30

2. The bolt head is hexagonal shaped (unless otherwise stated). Use the diameter size to work out the size of the hexagonal bolt head. There are two ways to do this, depending on which view of the bolt is visible.

   (i) Bolt head (hexagon) across the corners - 1.75 x Ø — **For M30 bolt 1.75 x 30 = 52.5**

   Now divide this size by 4 = 13

   (ii) Bolt head (hexagon) across the flats - 1.5 x Ø — **For M30 bolt 1.5 x 30 = 45**

   Now divide this size by 2 = 22

3. Bolt head height - 0.7 x Ø — **For M30 bolt 0.7 x 30 = 21**

   The drawing below shows how the sizes from 2(i), 2(ii) and 3 are used.

4. There is a chamfer on the bolt head, on one side and also on both sides of the nut (as shown below). This is to allow spanner to fit on easily. Use the metric size of the bolt to work out the size or the radius required to draw the chamfer.

   Radius of chamfer = 1.5 x Ø — For M30 bolt 1.5 x 30 = 45

   On the elevation, measure this size along the centre line from the end of the bolt head. This finds the centre of the arc to draw the chamfer. Set a compass to 45mm and draw an arc till it cuts the nearest two edges on the bolt head. This gives the chamfer. this size can be projected to the outside edges to complete the chamfer on the elevation.

5. Standard washer sizes are based on the metric size of the bolt as follows:

   (i) Outside diameter - 2 x bolt Ø — **For M30 bolt 2 x 30 = 60**

   (ii) Inside diameter depends on the size of the bolt:

   For bolts under M10 = bolt Ø + 0.5 mm
   For bolts over M10 = bolt Ø + 1mm

   (iii) Washer thickness - 0.2 x Ø — **For M30 bolt 0.2 x 30 = 6**

6. The nut is drawn using the same sizes as the bolt head (**see 2(i) or (ii)**). However the nut has a chamfer on both ends and can be found by using step **4**. The nut is thicker than the bolt head, use the formula below:

   Nut thickness - 0.8 x Ø — **For M30 bolt 0.8 x 30 = 24**

7. Some other information you may be given or have to work out from the drawing:

   (i) The thread length on the bolt. (See the elevation)

   (ii) The overall length of the bolt. (See the elevation)

8. Remember nuts bolts and washers are **NOT** sectioned in engineering drawings.

Now use the diagrams below and the step by step instructions to draw nuts, bolts and washer of any metric size.

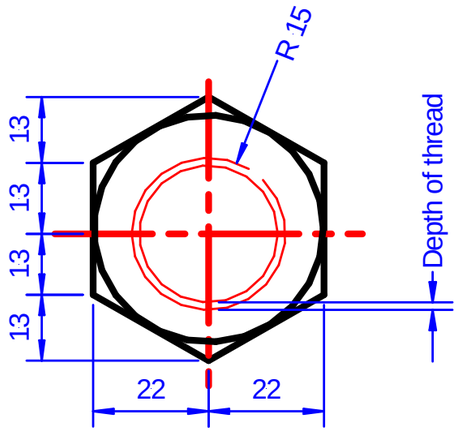

Bolt End Elevation
See 1 and 2

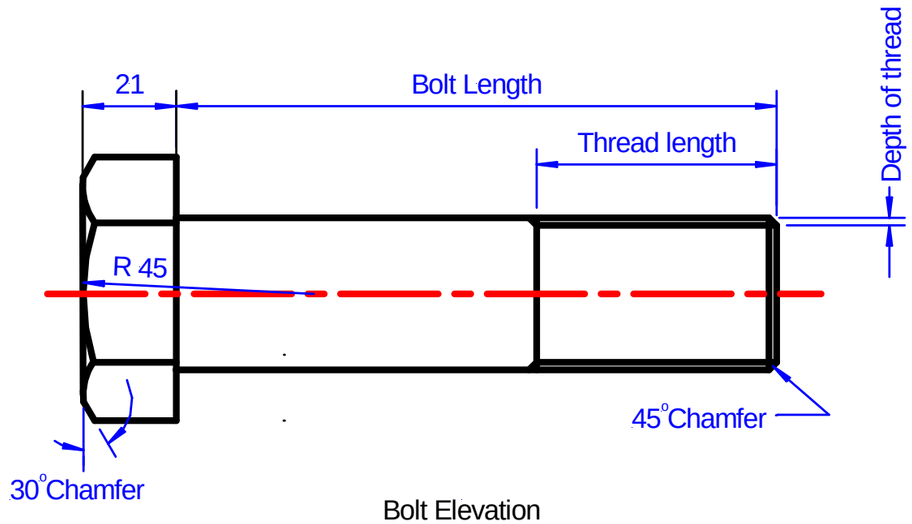

Bolt Elevation
See 3 and 4

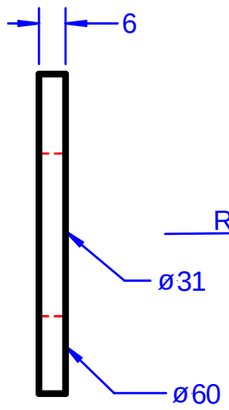

Washer
See 5

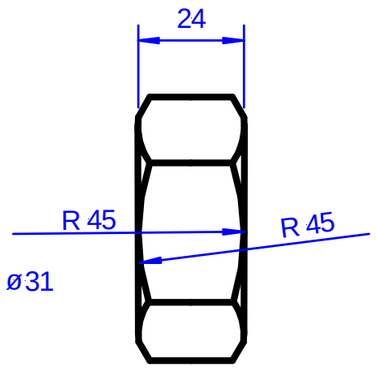

Nut
See 4 and 6

Unit - **Technical Graphics 2** Topic - **Section Drawing**	Drawing Metric Nuts And Bolts	Higher Graphic Communication	