Information Sheet 1 - Pictorial Drawings

You will be familiar with four types of pictorial drawings from Standard Grade, these are isometric, planometric, oblique, and finally pictorial sketching where there is no set viewing angle. The higher course also introduces measured perspective drawings. All the pictorial drawings at higher level are more difficult and you will need to think carefully about each problem. Each style of drawing has its own advantages and disadvantages, summarised below:

Drawing Type	Advantages	Disadvantages
Pictorial Sketches	Can be drawn at any angle No technical drawing equipment required Can be quick to produce	Can be difficult to get the correct proportions for the sketch To produce good sketches requires practice
Isometric	Very accurate drawings can be produced Do not need to alter any sizes when drawing	Technical drawing equipment required Gives a slightly distorted view of the object All circles and arcs need to be constructed
Planometric	Very accurate drawings can be produced True circles are drawn with a compass on the plan face For higher drawings sizes are not altered	Technical drawing equipment required Gives a slightly distorted view of the object Circles and arcs need to be constructed on height planes
Oblique	Very accurate drawings can be produced True circles are drawn with a compass on the front face	Technical drawing equipment required Gives a slightly distorted view of the object Circles and arcs need to be constructed on angled planes Sizes back along the 45° lines need to be halved
Measured Perspective	Very accurate drawings can be produced Gives a very realistic view of the object No circles or arcs to draw for higher drawings	New drawing method You need to be very accurate when projecting lines You need a scaled plan

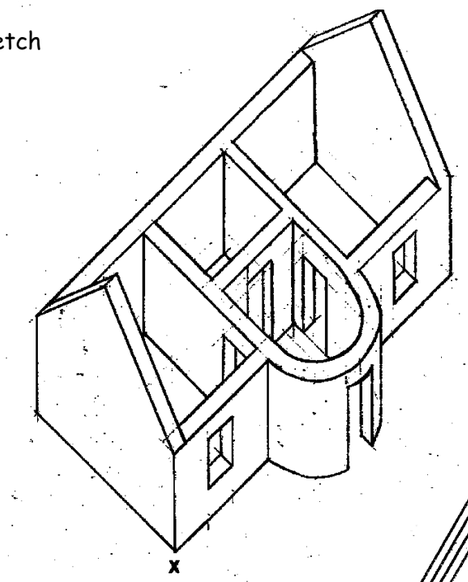

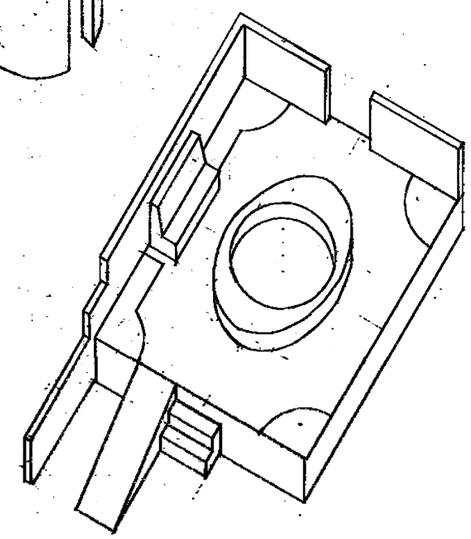
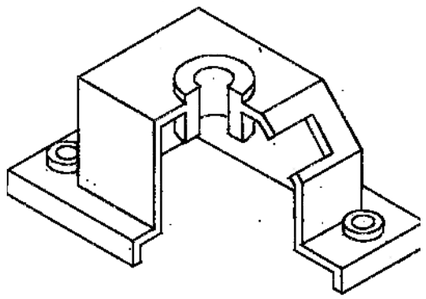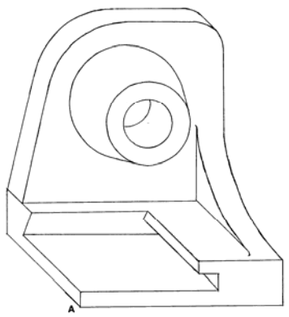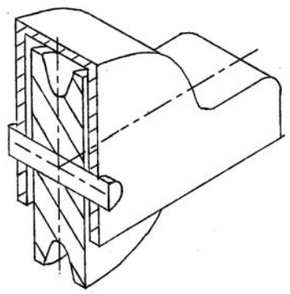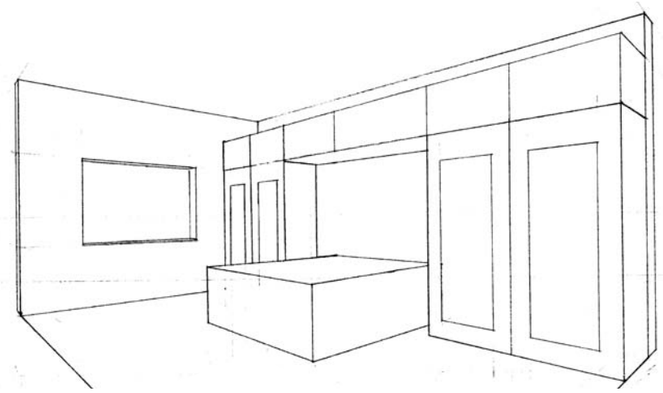
At this level you can be asked to draw pictorial exploded, assembly and sectioned views of objects. You can see from the examples on the page the range of drawings you will need to do as part of the higher course. These drawings can be time consuming and you need to practice if you wish to complete them in a reasonable time in the final exam.