Orthographic Sectional Drawing 1

Often in complicated technical or engineering drawings it is desirable to view the inside of the object to see how it fits together. Also, if the object is assembled from lots of smaller components, the hidden detail on the orthographic views would be very confusing and hard to decipher. In these situations it is easier to draw a sectional view (at an appropriate point) through the object.

Cutting Planes

When sectioning an object you have to imagine a cutting plane which passes through the object. The position of the cutting plane will depend on what internal part(s) you wish to view. The cutting planes shown below are vertical and horizontal, for higher drawings, the cutting planes can be at and angle or stepped or both.

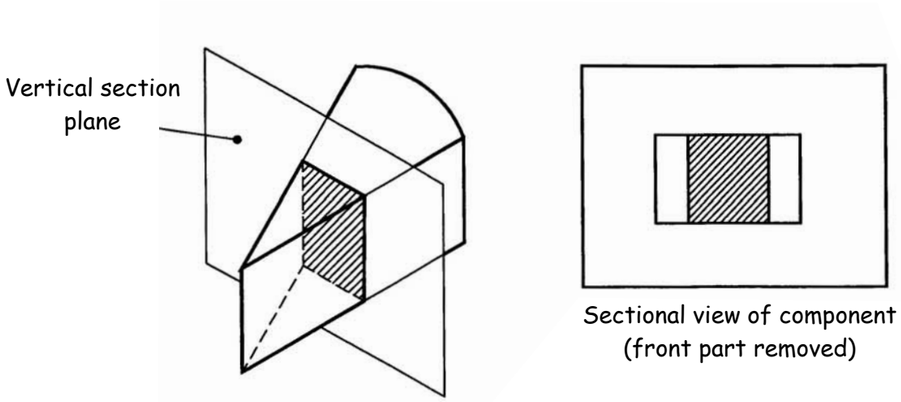

Sectional view of component (front part removed)

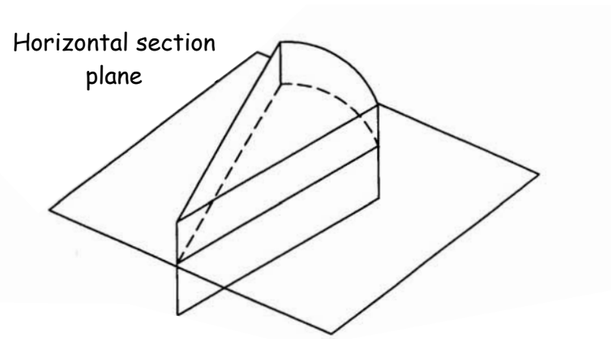

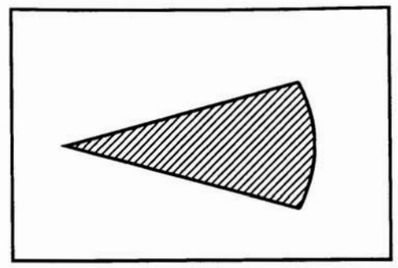

Sectional plan of component (top removed)

Cutting planes should be indicated by long chain lines, thickened at the ends and at changes of direction, thin lines elsewhere, and should be designated by capital letters. The direction of viewing is shown by arrows resting on the cutting line. You can section any type of view, plan, elevation, end elevation and pictorial views can also be sectioned.

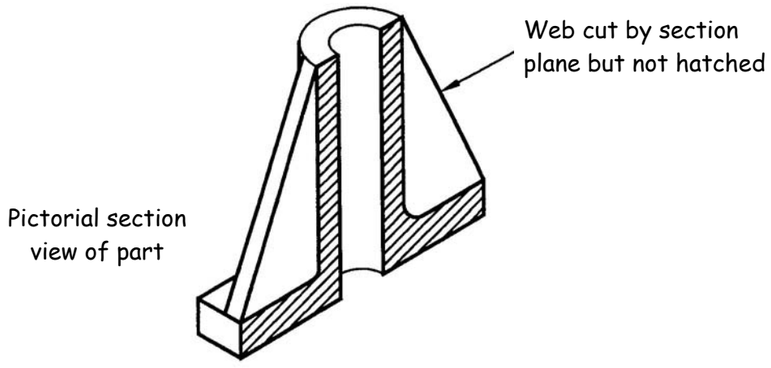

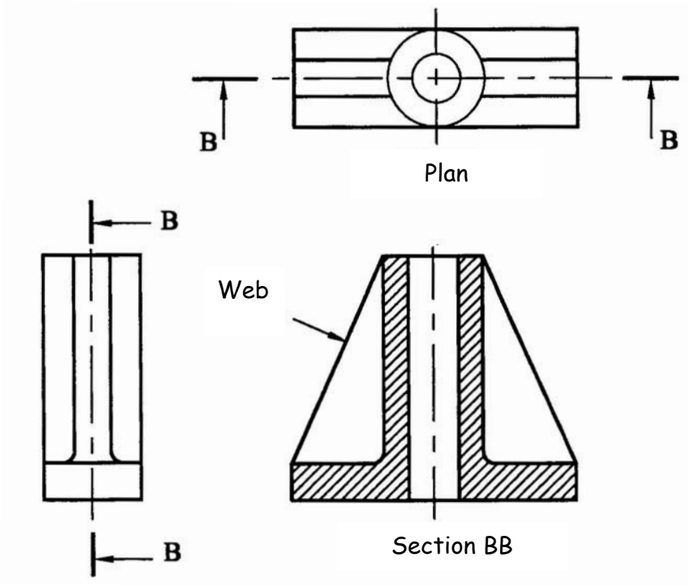

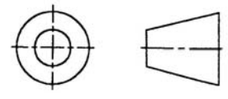

Unit - **Technical Graphics 2** Topic - **Sections**	Higher Graphic Communication	