Orthographic Sectional Drawing 2

Types of Section

There are many different ways to section an object, some of the more common ones are illustrated below. The method used depends on the type of object being sectioned or the detail you need to highlight in the object.

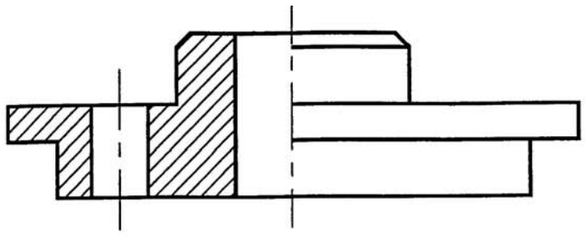

Half Sections
Good for objects that are circular since the section detail on the other half would be exactly the same.

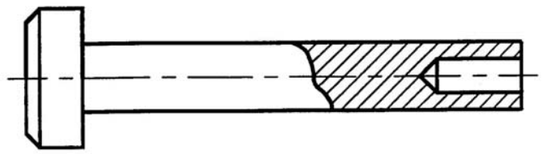

Part Sections
When you only need to show a small detail or the part. For example, holes, tapped holes and keyways.

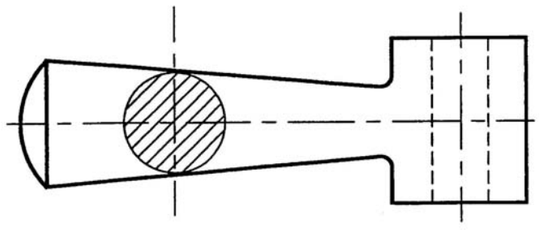

Revolved Sections
Good for showing the cross section details of handles or supports.

Components Excluded From Sectioned

There are some engineering details that, if sectioned, loose their identity or would create a wrong impression and these items are never sectioned.
For example:

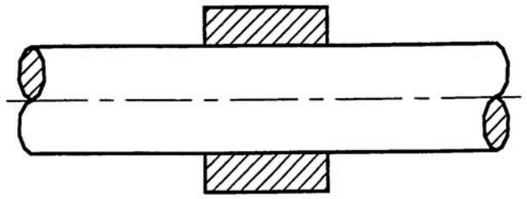

Shafts are not section when cut along their length

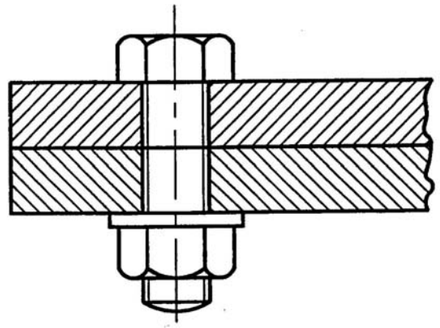

The rest of the component is sectioned, the nut and bolt is viewed as it would be seen externally

Other engineering details that do not show hatching when sectioned.

Nuts and bolts
Studs
Screws
Shafts
Webs
Ball bearings and ball races
Roller bearings and other roller races
Keys
Pins
Gear teeth