Tolerances - Information Sheet 1

Introduction

British standards are accepted as national guidelines in the industrial and commercial world. They define the standards for technical criteria, manufacturing and health and safety. British standards assist in the reduction of unnecessary product variety, they simplify the manufacturing processes and encourage interchange ability. They also make communication between professional people effective since everyone can speak the same technical language. The topic tolerancing has a very important part to play where British standards are concerned. Figure 1 on the right shows the sort of information you would expect to find on a typical engineering manufacturing drawing. There is tolerancing information, details of surface finishes and surface smoothness, threads, chamfers and tapers are also dimensioned. All of this information (and more) would be required to manufacture this component and make sure that it would function correctly when finished.

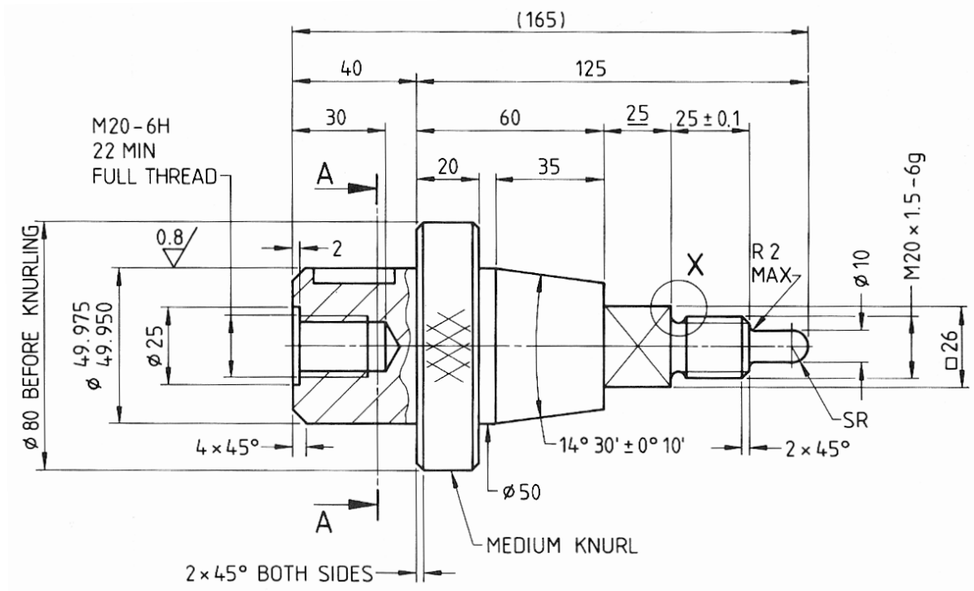

Figure 1

What is a Dimensional Tolerance?

When manufacturing or constructing a product it is virtually impossible to achieve precisely the required size for each of its component parts. The error allowed in manufacturing any component is called the **tolerance** - this information is normally given on the drawing of the item. Tolerances which affect the size of a part, or features on it, are referred to as dimensional tolerances. Tolerances are also applied to mating and locating features on components, they help to make sure parts will assemble easily and correctly.

In practice, all the component parts of a product are manufactured to a level of 'tolerance' which is the acceptable degree by which they may vary from their **nominal size**. To manufacture all components to an absolute precision would be a waste of resources and time. Think of a wheel for a shopping trolley that is designed to run freely on a fixed axle. There must be some clearance between the wheel bearing surface and the axle, otherwise the wheel would be unable to rotate. In Figure 2 the nominal size of the axle is 20mm and it must not be larger than this but it can be smaller by up to 0.3mm. The size of the axle can be defined as $20\text{mm}^{+0.00}_{-0.30}$.

Likewise the hole in the wheel bearing must always be larger than the axle by at least 0.2mm but it can't be too large as this will also cause problems with the smooth running of the wheel. This size of the hole can be between 0.2mm and 0.5mm larger, this is defined as $20\text{mm}^{+0.50}_{+0.20}$. In Figure 3 the maximum clearance of 0.8mm is shown, this happens when the axle size is Ø19,7mm and the bearing size is Ø20,5mm. The wheel and axle will still function with this clearance, just as they will also function when components combine for the minimum clearance, in this example the minimum clearance is 0.2mm.

Appropriate use of tolerances will ensure that when a product reaches the assembly stage, components designed to fit together will do so without the need to be selective. In the example, any combination of wheels and axles, made to these tolerances will fit together because there has been a clearance designed in. Any components that do not fit together, due to manufacturing or material defects will be rejected or reworked to fit.

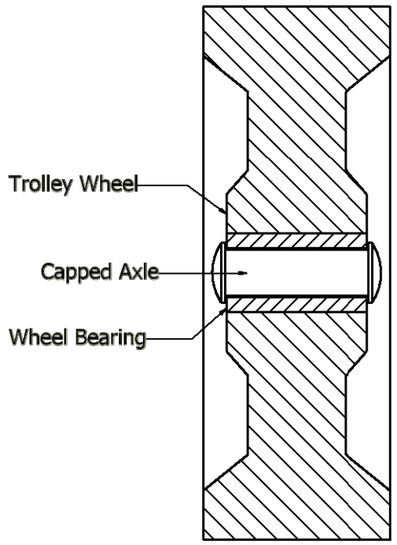

Figure 2

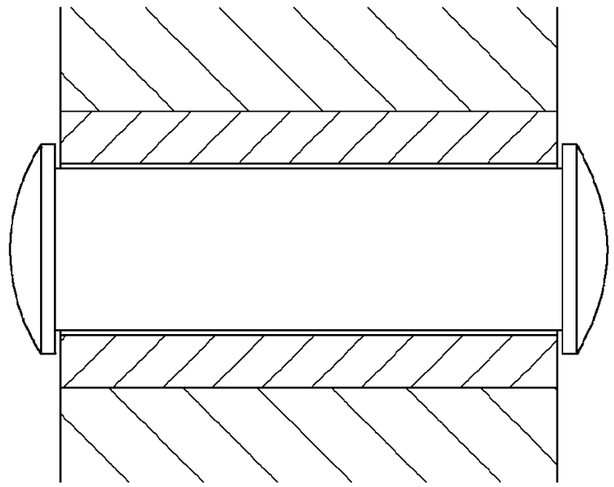

Figure 3: Scaled view showing Axle and Bearing

This view shows the maximum clearance between the components. Although it looks like a large gap it is only 0.4mm on each side.