Tolerances - Information Sheet 5

Machining And Surface Textures Indication

Many of the engineering components you will need to draw and section for the higher course will be manufactured by sand casting. This is a method of producing components by pouring molten metal into a shaped cavity formed in sand. The component is allowed to cool before being removed from the mould. With this process it is not possible to produce components with perfectly smooth and accurate surfaces or sharp 90° corners. Therefore, certain critical areas will need to be machined to the correct size or smoothness, in order for it to function correctly when finally assembled. The areas to be machined and the level of accuracy required need to be shown on the component drawing.

Symbols Indicating Surface Texture

The basic symbol is a tick the two legs of which are inclined at approximately 60° to the line representing the surface as shown in **Figure 1(a)**. The line thickness used for the symbols should be the same as that used for the dimensions on the drawing.

If machining of the surface is required, a bar is added to the basic symbol as shown in **Figure 1(b)**.

If removal of material is not permitted, a circle is added to the basic symbol as shown in **Figure 1(c)**.

Application of Symbols

Symbols should normally be shown once on each surface, preferably on the same view as the size or location dimensions of the surface. Symbols may be applied to the outline representing the surface, to a projection line, to a leader line, or to an extension of a dimension line. In all cases the symbol should be applied normal to the line. See **Figure 2** for examples of correct practice.

Indications Added to Symbols

Surface texture values, (R_a roughness values - see BS EN ISO 1302), in micrometres - μm are added to the symbols as shown (**Figure 2**). When only one value is specified it represents the maximum permissible value of surface roughness. When it is necessary to specify maximum and minimum values of surface roughness, the maximum limit is placed above the minimum limit (**Figure 2**).

Where all surfaces of a component are to be machined, a general note may be used on the drawing as shown (**Figure 3**), and a value added if necessary.

These symbols convey essential manufacturing information for the item. If this information is not clearly indicated on the drawing then ultimately, individual parts may not fit together or the assembled machine will not operate.

Figure 1

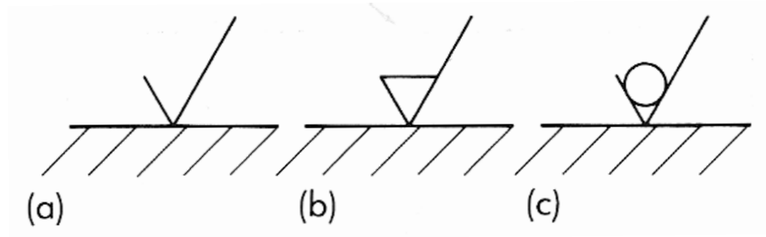

Figure 2

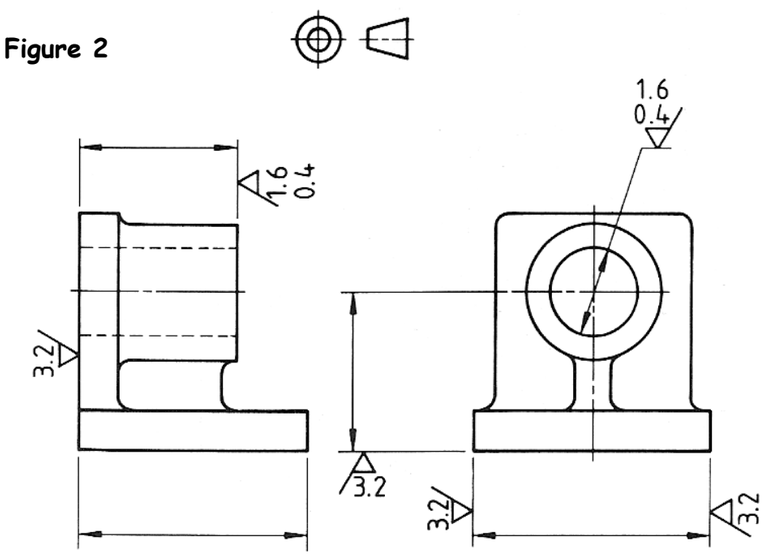

Figure 3

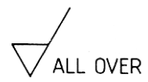

Acknowledgements

Permission to reproduce extracts from British Standards is granted by BSI. No other use of this material is permitted. British Standards can be obtained in PDF or hard copy formats from the BSI online shop: http://shop.bsigroup.com or by contacting BSI Customer Services for hard copies only: Tel: +44 (0)20 8996 9001, Email: cservices@bsigroup.com.