Information Sheet 1 - Perspective Views

Perspective is a form of illustration which gives an illusion of depth. It is how we actually see things around us.
We make observations which register the relationships between separate objects i.e., their positions, size, colour, tone.
We also make observations about the different component parts of each object, buttons on a radio or steps on a stairway.

Do we understand what we see?

Most of us are experienced observers, but do we understand these relationships well enough to recreate the illusion of them on a flat sheet of paper?
There are a number of techniques that can be employed to build up a realistic perspective illustration on a flat sheet of paper.
Before these can be put into practice key things need to be understood before we begin.

1. The viewer's eye level will always be level with the horizon line.
2. Relationships between features on the drawing are always relative to the viewers line of vision.
3. An object appears to reduce in size and detail as it moves away from the viewer towards the horizon line.
4. Vanishing points always occur on the horizon line.
5. Objects on the drawing do not necessarily have the same vanishing point.
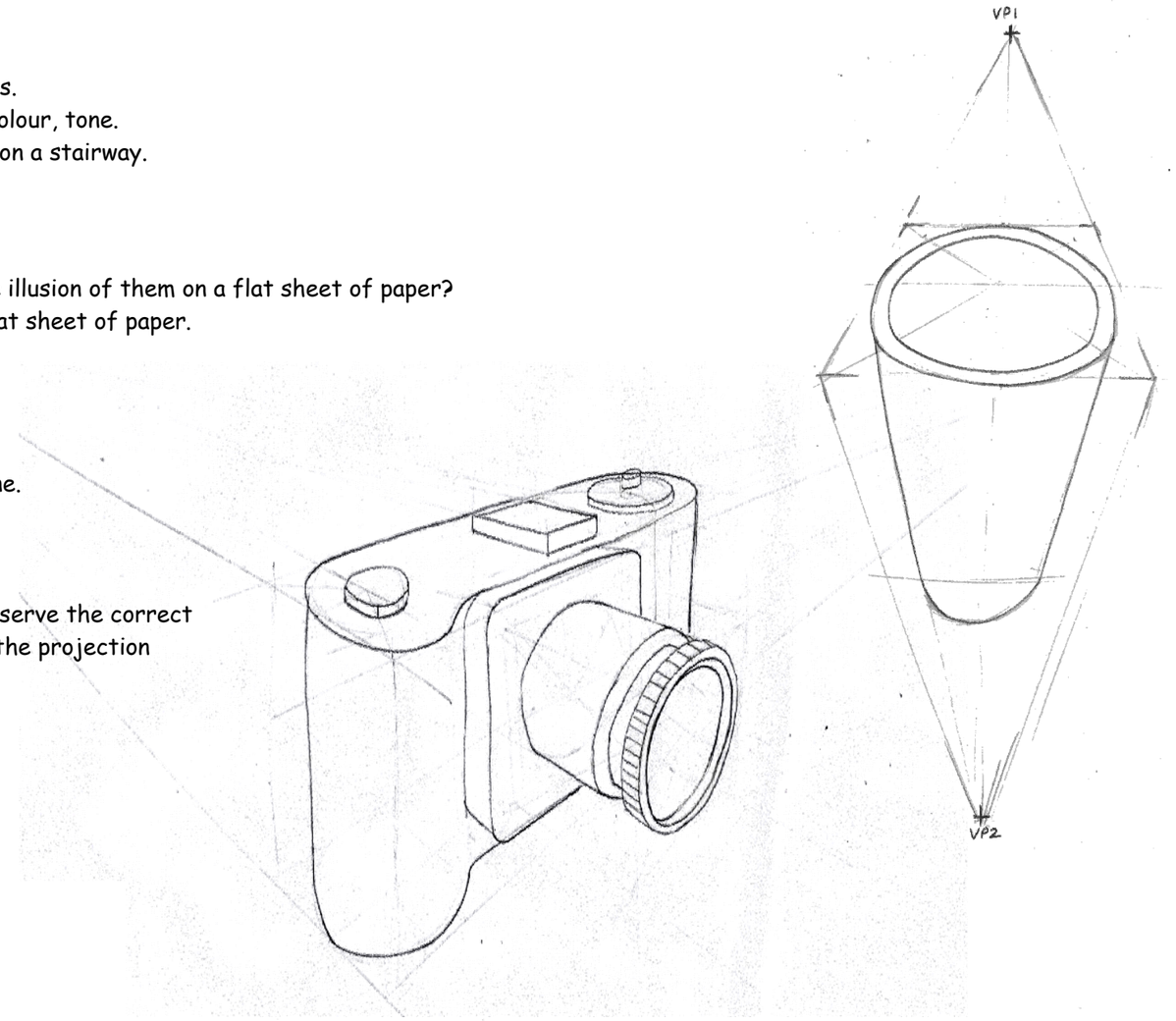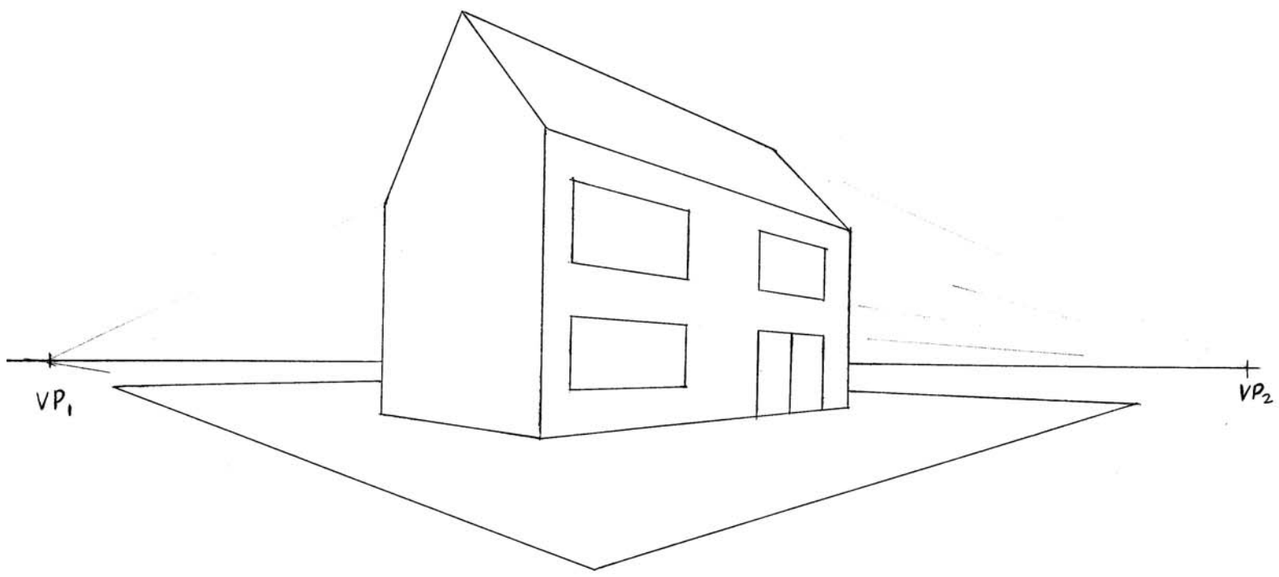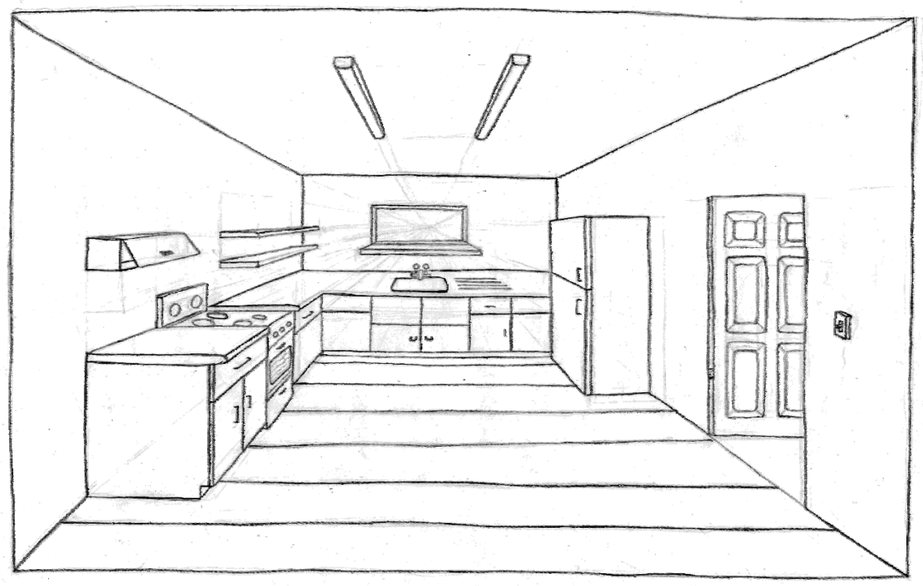
For this unit of work you will be estimating all of the sizes for your sketches and you must try to visually preserve the correct proportions of the given objects. Remember that objects will appear to get smaller as they move back along the projection lines to the vanishing points.