CfE Higher Physics

Electricity & Electronics Homework

Homework 1 - Resistor networks

1. In the circuit opposite, resistors R_1 , R_2 and R_3 are connected in series across a 24 V supply

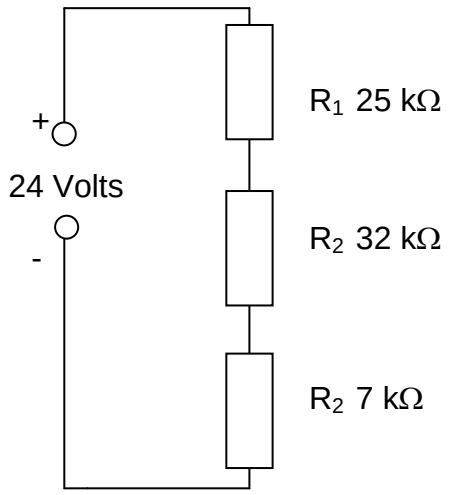

   (a) What is the total resistance?
   (b) What is the current in resistor R_1?
   (c) What is the voltage across R_2 ?

2. Three resistors are connected to a 12 V supply as shown. An ammeter and a voltmeter are placed as indicated. What are the readings on the two meters?

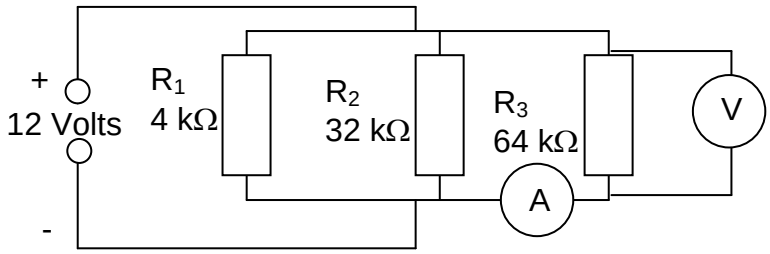

   a. Calculate the total resistance
   b. What is the expected voltmeter reading?
   c. What is the expected ammeter reading?
   d. Why might the reading not be what you have calculated?

3. In the following arrangement of resistors, what is the resistance between points P and Q?

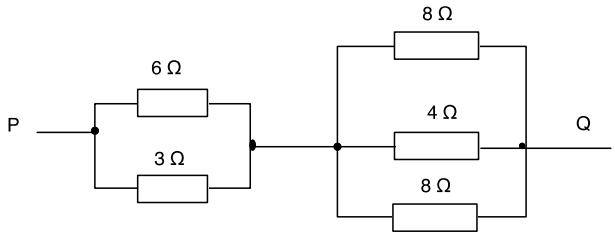

4. A small aquarium heater is designed to operate at 100 V and 0.1 A. It can be correctly operated from a 230 V mains supply by inserting a suitable resistor R in series.

   (a) Draw a labelled circuit diagram .
   (b) Calculate the value of the resistor R
   (c) Calculate the power dissipated by the resistor R

5. ***Research*** the quantity 'resistivity'.
   What is resistivity defined as and what are the units?

Homework 2 - EMF and Internal Resistance

1. A battery is marked as having an EMF of 6 V.
   (a) What does EMF stand for?
   (b) Describe EMF in terms of energy and charge.

2. Explain how you would find the internal resistance of a battery using an ammeter, voltmeter, variable resistor and a switch. Your answer should include:
   (a) A diagram of how the apparatus is connected
   (b) How you would obtain suitable measurements
   (c) How you would use your measurements to obtain a value for the internal resistance of the battery.

3. A car mechanic measures the EMF of a car battery drawing no current as 12.6 V. When the rear screen heater (resistance 30.0 Ω) is switched on the PD produced by the battery drops to 12.0 V
   (a) What characteristic of the battery causes the voltage drop?
   (b) What is the term used to describe the drop in PD observed?
   (c) Draw a labelled circuit diagram to illustrate the situation when the rear screen heater is operating.
   (d) Calculate the current flowing in the circuit
   (e) Calculate the internal resistance of the battery

   The mechanic accidentally drops a spanner of resistance zero ohms across the terminals of the battery, effectively short circuiting it.
   (f) Draw a circuit diagram to represent this situation
   (g) What is the output p.d. from the battery under these conditions?
   (h) Calculate the current flowing in the battery as a result of the short circuit

4. A pupil constructs an ohmmeter using a cell of EMF 1.5 V and internal resistance 1.0 Ω. She chooses an ammeter which reads up to 5 mA and had a resistance of 4.0 Ω. The circuit is as shown with the resistance measured between X & Y

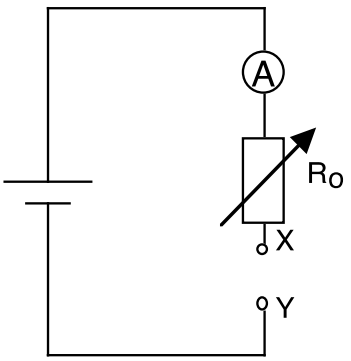

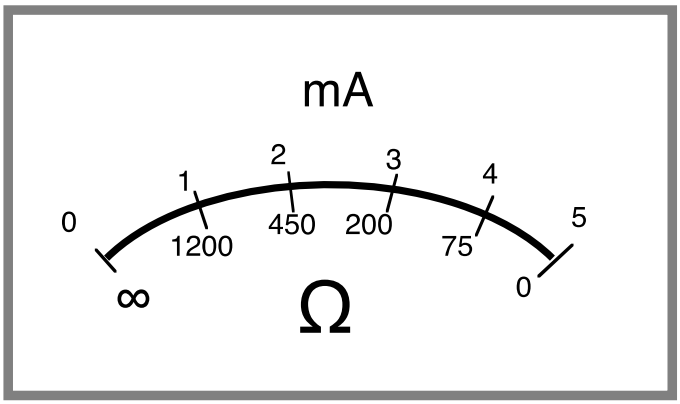

(a) The original current scale and the corresponding resistance scale are shown above. Draw a circuit diagram of the situation when the ohmmeter is short circuited and hence calculate the value of Ro.

5. ***Research*** the use of *shunts* and *multipliers* to convert a basic meter to an ammeter or voltmeter. What are the typical values of a shunt or a multiplier?

Homework 3 - Alternating Current

1. A light bulb has resistance of 960Ω. It is connected up to the 230 V_{rms} mains. Calculate:
   (a) the peak voltage of the mains
   (b) the RMS current in the bulb
   (c) the peak current in the bulb
   (d) the mean power dissipated in the light bulb
   (e) the ***maximum*** power dissipated in the light bulb.

2. In designing an electric fan, an engineer arranges two switches in such a way that the heater element cannot be on alone without the fan.

   (a) Suggest a reason why she does this. [
   (b) Draw a circuit which will achieve the manufacturer's specifications, that is it must be possible to have :-
      (i) the heater element and fan both switched off
      (ii) only the fan on
      (iii) both the fan and heater element on

   (c) If the heater element has a power rating of 1.5 kW when it is operated from a 230 V mains supply, what is it s resistance?
   (d) The 230 V in (c) refers to the root mean square value of the ac mains voltage.
      (i) Explain the term "root mean square voltage"
      (ii) The mains frequency is 50 Hz. Draw a graph of the instantaneous mains voltage against time covering a time period of 0.04 s. (Label both graph axes)

Homework 4 - Capacitors

1. In a time delay circuit for a door lock, the circuit opposite is used.
The capacitor is initially discharged and then the circuit is switched on

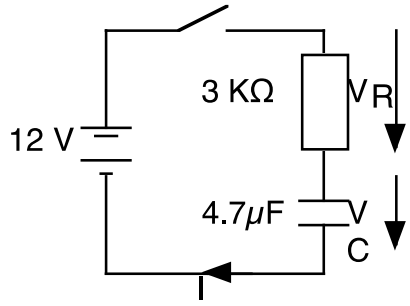

(a) What is the initial voltage across the capacitor?
(b) What is the initial PD across the resistor R?
(c) Calculate the initial charging current.

The capacitor is discharged using the circuit opposite.

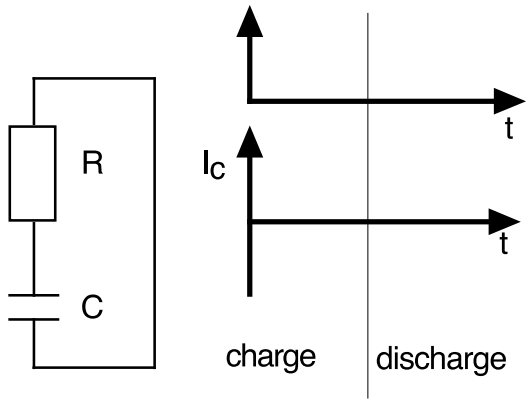

(d) Sketch graphs of voltage and current charging and discharging against time. Label your graphs with the supply voltage and the maximum current

2. Capacitors are used to store charge for camera flash bulbs. An engineer designing a camera used an experiment to determine the capacitance of an unmarked capacitor, C.

The capacitor was charged up to 2 V using the circuit opposite.
The current was regulated by the variable resistor R_v so that a steady current of 0.20 mA flowed during the 10 seconds that it took to completely charge the capacitor.

(a) Explain whether the resistor was increased or decreased during the charging period by considering the voltage across the capacitor.
(b) What was the charge supplied to the capacitor?
(c) Calculate the capacitance of the capacitor using this charge.
(d) Convert your answer to microfarads
(e) Calculate the charge that would be stored using a supply voltage of 10 V.
(f) Sketch a graph of charge against voltage if the tests were repeated with supply voltages of 2, 4, 6, 8 and10 V
(g) What is the gradient of this graph?
(h) How much energy is stored by the capacitor at 10V?

Homework 5 - Semiconductors

1. A physicist has discovered six new materials:

Name	Appearance	Resistance of sample
Drakiesum	silvery liquid	0.01 Ω
Drummossium	dull green crystal	depends on voltage
Raigmite	bright yellow solid	0.3 Ω
Crownium	clear solid	> 10 MΩ
Culcaboke	blue crystalline solid	10 k Ω in dark, 20 Ω in light
Kingsmillium	grey powder	> 10 MΩ

Classify the six materials into three groups based on their properties and make a table summarising this classification.

2. Describe the chemical and electrical differences between intrinsic and extrinsic (doped) semiconductors.

3. Describe the movement of charge in a p type semiconductor in terms of electrons, holes and electron outer shells.