# CfE Higher Physics

Unit 3

Electricity

# Alternating Current and Voltage

# Learning Intentions

- Describe a.c. electric current and voltage in terms of the movement of charges in a circuit.
- State that a.c. current and voltage can be measured using an oscilloscope.
- Describe how to measure the frequency and peak voltage of an alternating supply using an oscilloscope.

# Alternating Current

Electric charge in **alternating current** (AC), changes direction periodically.

The voltage in AC circuits also periodically reverses because the current changes direction.

# Alternating Current

- Alternating current is produced by rotating an electromagnet in a coil of wire.

- This means that the induced voltage, which is constantly changing in the form of a sine function, pushes the current one way and then the other.

# Alternating Current

The pattern of an alternating current can be observed on an oscilloscope:

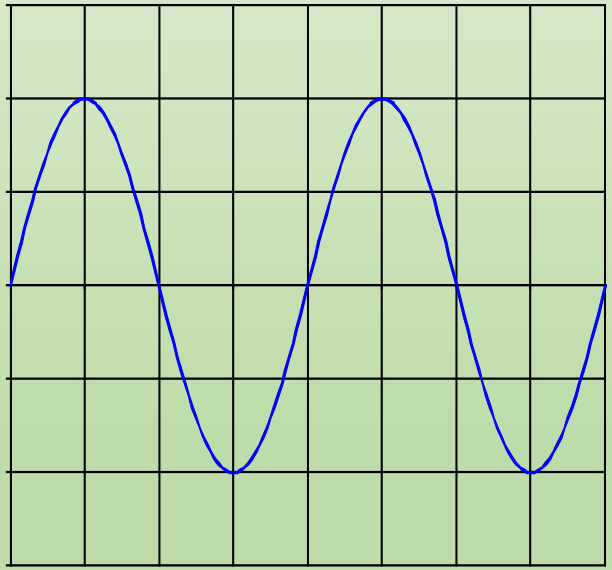

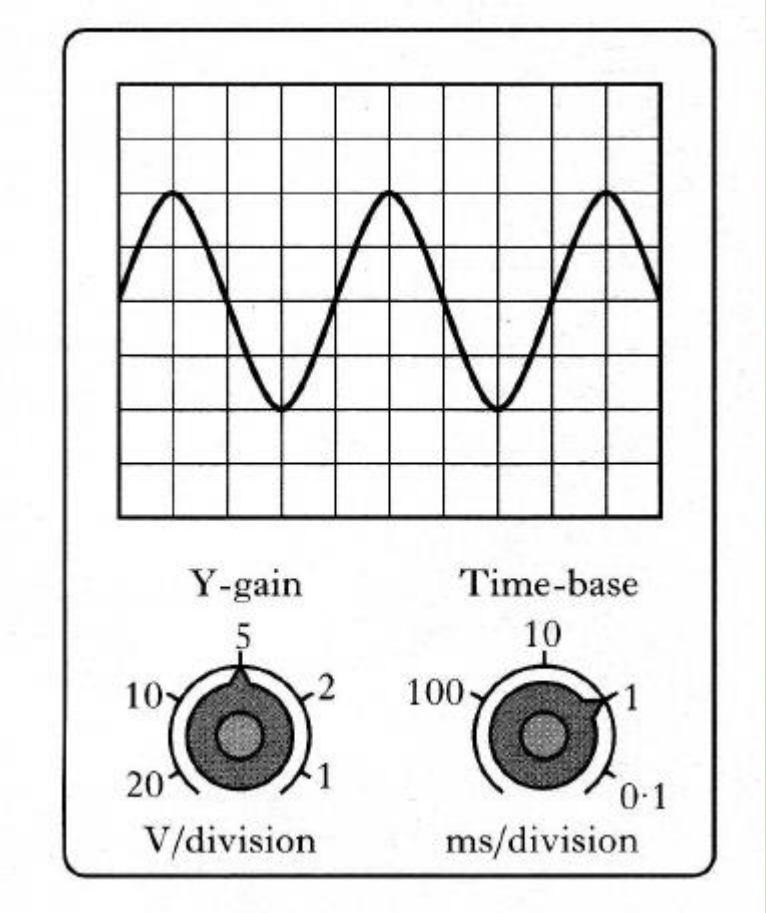

# Measuring Frequency

The frequency of an alternating current can be measured using the timebase setting on an oscilloscope:

Period = number of divisions per wave x timebase setting

$$\text{Frequency} = \frac{1}{\text{Period}}$$

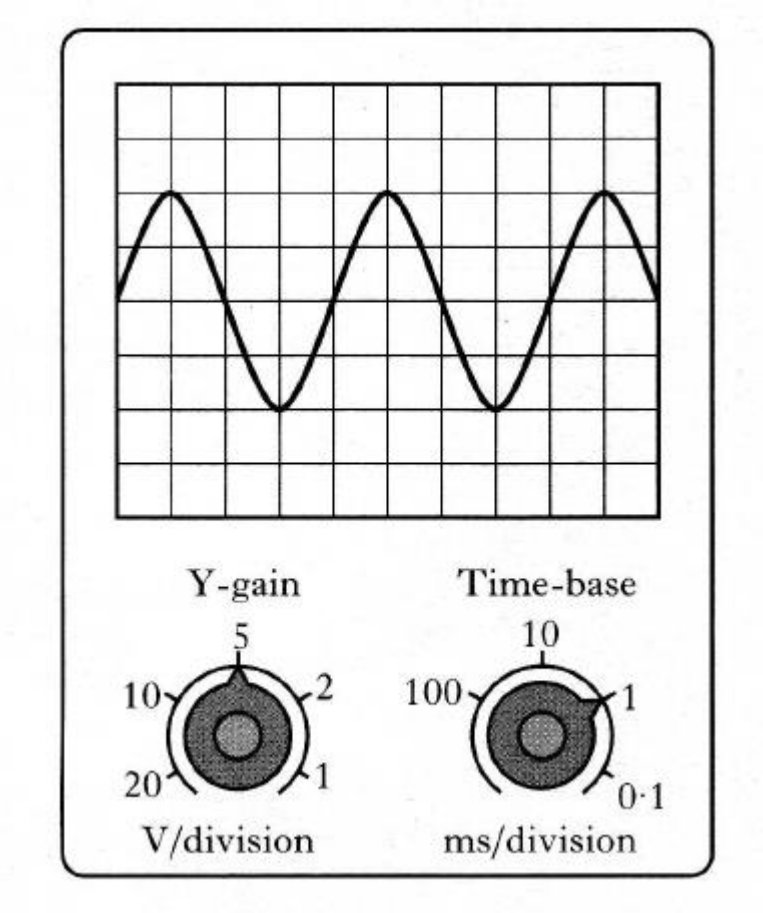

# Measuring Voltage

The voltage of an alternating current can be measured using the Y-gain setting on an oscilloscope:

You count the boxes  vertically – the amplitude.

Voltage = number of divisions per wave x Y-gain

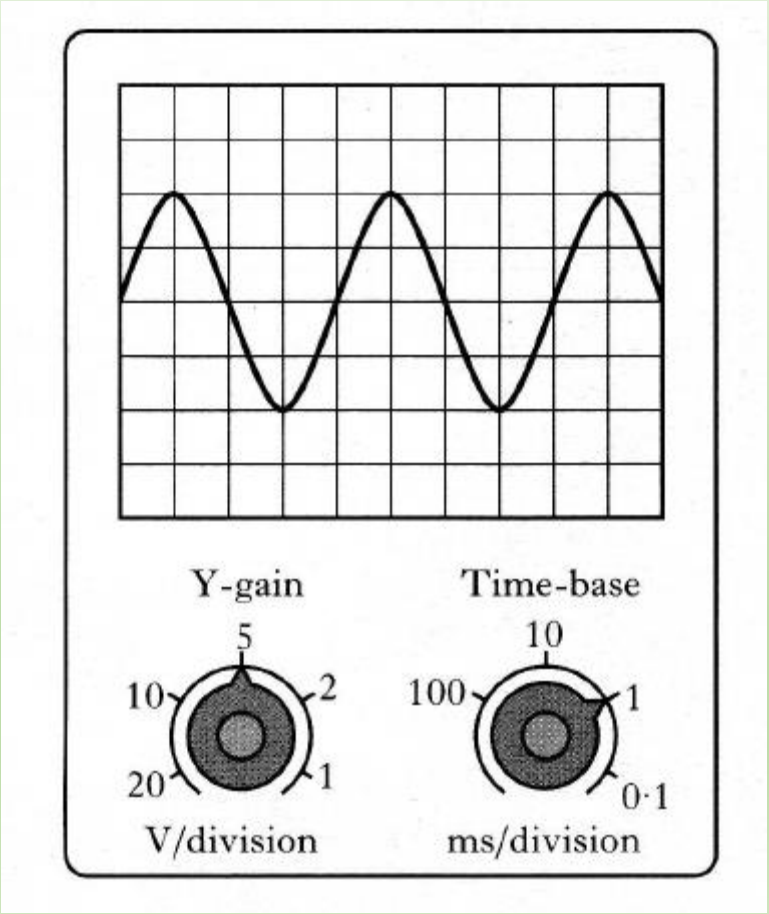

# Worked Example

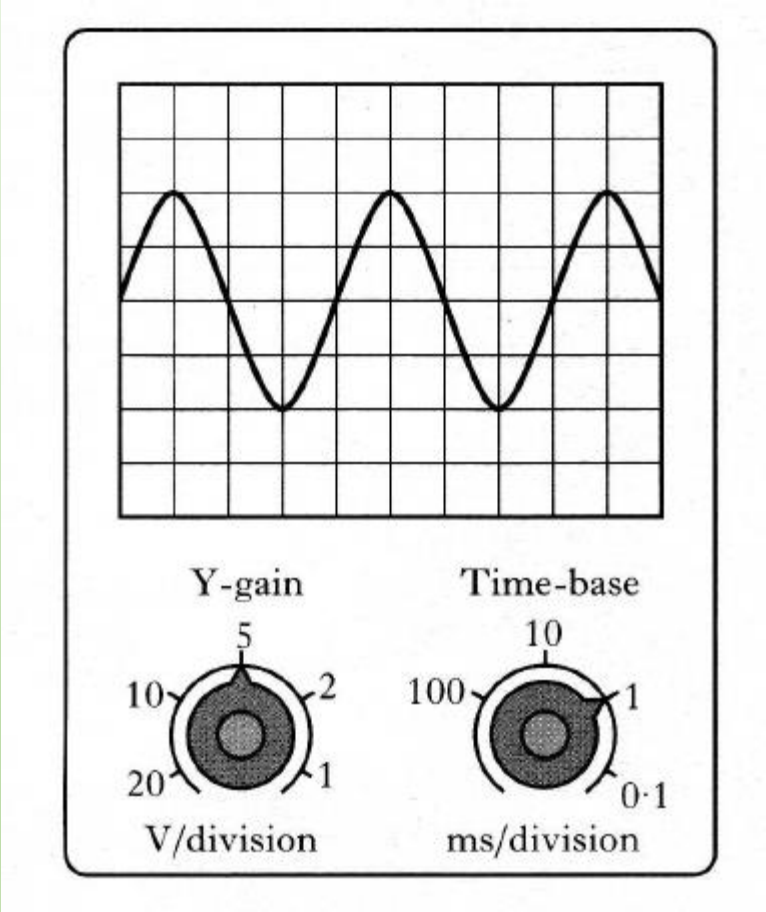


1. Calculate the frequency of the source.

2. Calculate the voltage of the source.

# Worked Example

Calculate the frequency of the alternating current shown below:

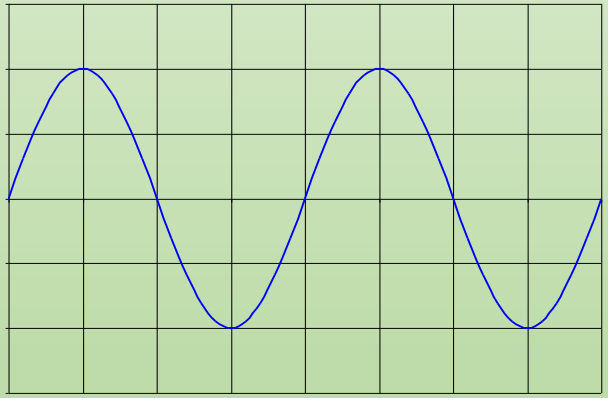

Timebase = 10 ms/div

Period = 4 x 10 ms

= 40 ms

$$\text{Frequency} = \frac{1}{0.04}$$

$$= \underline{25\ \text{Hz}}$$

# Success Criteria

- I know that in a.c the current changes direction periodically and so the voltage changes.
- I know that we use an oscilloscope to measure a.c. waveforms
- I can successfully measure the period and the frequency of an a.c. supply.

# Learning Intentions

- State that the r.m.s. voltage is equivalent to a d.c. voltage that produces the same power.
- State the relationship between peak and r.m.s. values for a sinusoidally varying voltage and current.
- Carry out calculations involving peak and r.m.s. values of voltage and current.

# Peak and r.m.s. Values

The maximum voltage (or current) of an a.c. supply is called the peak value. **This is the voltage you find on the oscilloscope trace**.

The average voltage (or current) of an a.c. supply is often more useful in calculations. This is known as the root mean square (r.m.s.) value.

$$V_{r.m.s.} = \frac{V_{peak}}{\sqrt{2}} \quad \text{and} \quad I_{r.m.s.} = \frac{I_{peak}}{\sqrt{2}}$$

The r.m.s. value is the quoted value for an a.c. supply.

# Worked Example

Calculate the peak current that passes through a motor with a resistance of 220 Ω when it is connected to a 110 V a.c. supply.

$$V_{peak} = \sqrt{2} \times V_{r.m.s.}$$
$$= \sqrt{2} \times 110$$
$$= 156 \text{ V}$$

$$I_{peak} = \frac{V_{peak}}{R}$$
$$= \frac{156}{220}$$
$$= \underline{0.709 \text{ A}}$$

# Ohm’s Law and Peak/RMS values

- When using peak/rms values for ohm's law questions it is important that we do not 'mix' peak and rms values:

i.e.

$$V_P = I_P R$$

$$V_{rms} = I_{rms} R$$

# Power and rms

- If you are asked for Irms and you are given the peak voltage and a power, you must find the effective rms value for voltage first.

- Since the rms values are the **effective values** from the supply, we must use rms values in electrical power calculations.

i.e.

$$P = I_{rms} V_{rms}$$

$$P = \frac{V_{rms}^2}{R}$$

$$P = I_{rms}^2 R$$

# Experiment – Peak and rms (V and I)

- The circuit shown can be used to compare a.c. and d.c. supplies.
- When the switch is in position A, the supply is d.c.
- When the switch is in position B, the supply is a.c.

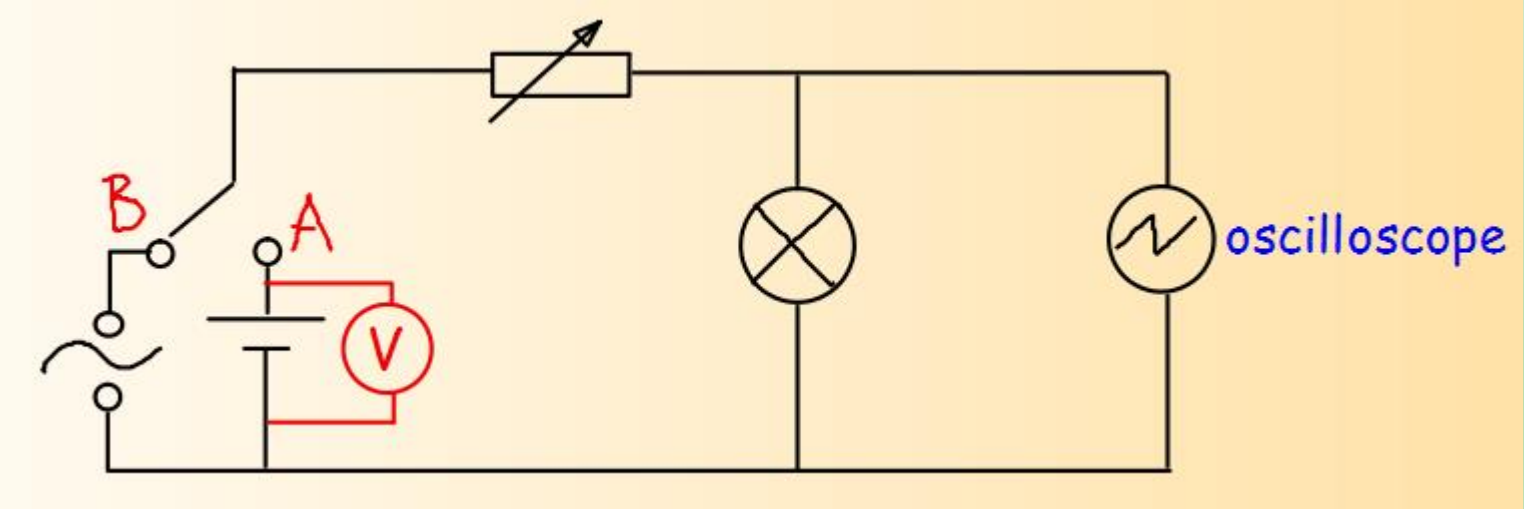

# Experiment – Peak and rms (V and I)

1. At position A, the d.c. voltage is measured on the voltmeter and the brightness of the bulb measured with a lightmeter.

2. The switch is moved to position B and the variable a.c. supply adjusted until the brightness is the same as the d.c. supply.

3. Measure the peak voltage of the oscilloscope and divide by 2

The value calculated should be equal to the d.c. value

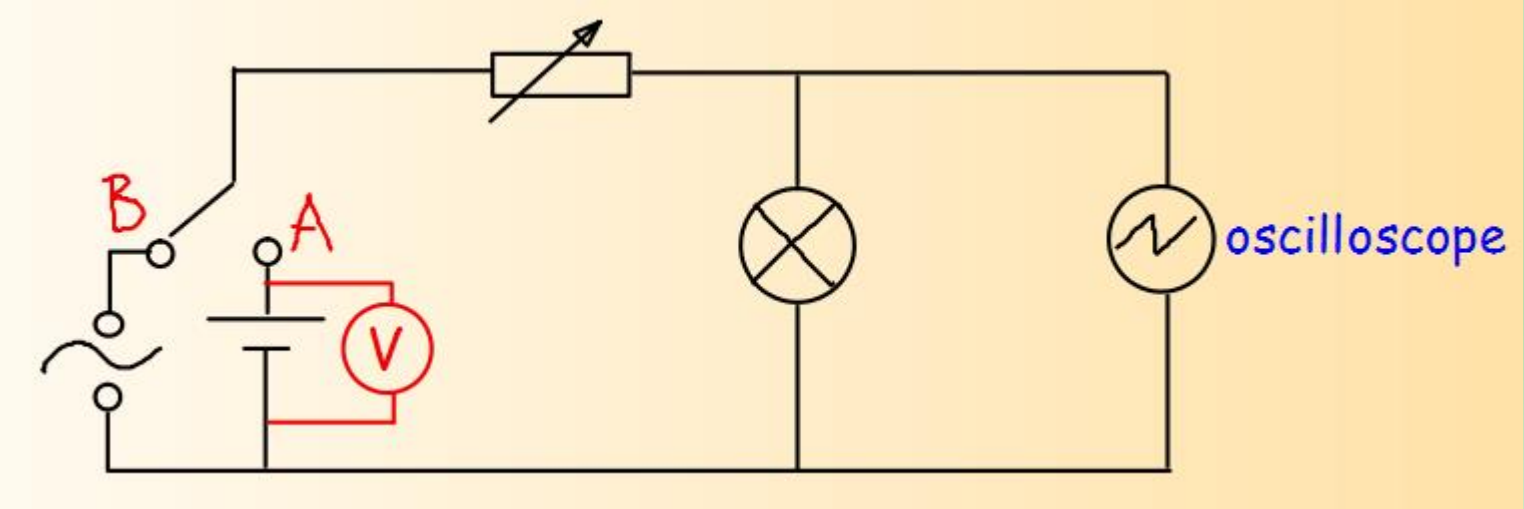

# Experiment – Peak and rms (V and I)

- This shows that the effective voltage of an a.c. supply is equal to a direct (d.c) voltage which gives the same energy transfer or power to an external device.