N5 Chemistry: Unit 2 – Nature's Chemistry REVISION

Lesson 17 – Energy from Fuels

Learning Outcomes

By the end of this lesson, you should have revised:

1. How to calculate the quantity of heat energy released when burning a fuel
2. How to use the energy calculation in different ways.

Success Criteria

You will have been successful in this lesson if you:

1. Watch the links provided
2. Complete revision questions provided
3. Complete and submit homework assigned

There is also a further reading section to help you gain more depth of understanding for this section.

If you have any questions about the content of this lesson, you should ask your class teacher either through your class MS team or via email. MS Teams will be monitored throughout the week by a chemistry teacher. If you need help or clarification with either the task or the content of the lesson, just ask.

Links to Prior Knowledge

You may wish to revise the following to help you understand this lesson:

- N5 Unit 2: Energy from Fuels

You do not need to copy any notes as this is all revision, but you should complete all questions and tasks as outlined in this document.

Watch this video first:

Lesson 17: Energy from Fuels - https://youtu.be/9PihXh7Wn3s

You should also consult your Unit 2 Notes and printed notes to help further consolidate your knowledge. A digital copy of the printed notes can be found on the S4 Chemistry Team.

Further Reading

To learn more about chemical analysis, try the following online resources:

BBC Bitesize: https://www.bbc.co.uk/bitesize/guides/zx73tv4/revision/4

Scholar: Log in through GLOW

National 5 Chemistry → Nature's Chemistry → 7. Energy from Fuels
→ 7.4 Energy from fuels experiment
→ 7.5 Calculating energy

Evans2 chem web: https://www.evans2chemweb.co.uk/

Username: snhs password: giffnock

Select any teacher → revision → National 5 → Unit 2 → Energy from Fuels

Extension Questions:

Yellow/Purple book Energy from fuels page 97-98

Complete the following questions in your class work jotter.
The answers will be posted on Teams on Wednesday.

Practice Questions – Energy from Fuels

1. State the equation used to determine E_h. (1)

2. Draw the experimental set up to show how you could determine E_h. (2)

For each of the following questions you should **show all your working clearly.**

3. What is the energy change when 1 g of ethanol, C_2H_5OH, is used to increase the temperature of 100 cm^3 of water by 30 °C? (3)

4. Calculate the increase in the temperature required to heat 50 cm^3 of water and produce 3 kJ of energy. (3)

5. In an experiment, butan-1-ol was burned releasing 14.63 kJ of energy. The heat released was used to heat 100 g of water with an initial temperature of 23 °C.
   Calculate the final temperature of the water. (3)

6. What is the specific heat capacity of iron, if it takes 125 J of heat energy to raise 111 g of iron by 2.5 °C? (3)

Total: 15 marks

Past-Paper Questions – Energy from Fuels

1. A student set up an experiment to determine the quantity of energy released when a hydrocarbon burns.

   Which of the following diagrams shows the apparatus which would produce the most accurate result?

A

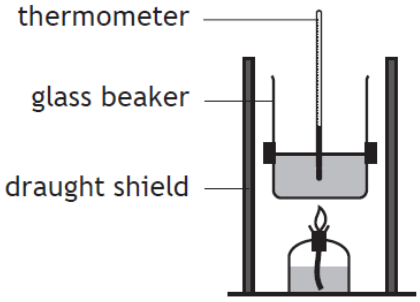

C

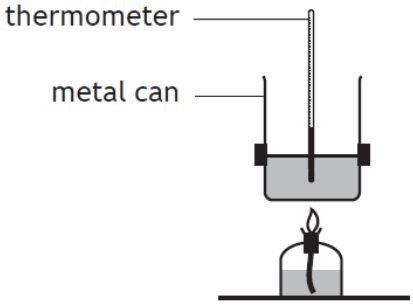

B

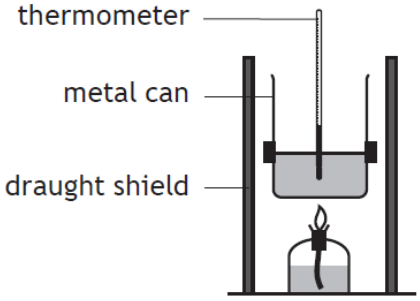

D

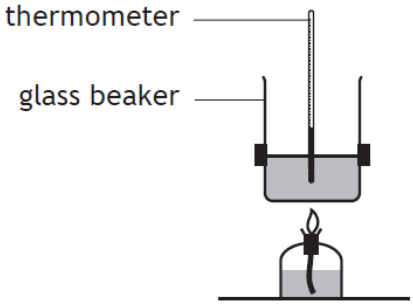

(1)

(questions continue on the next page)

2. Alcohols can take part in different types of chemical reaction.

A student carried out the following experiment.

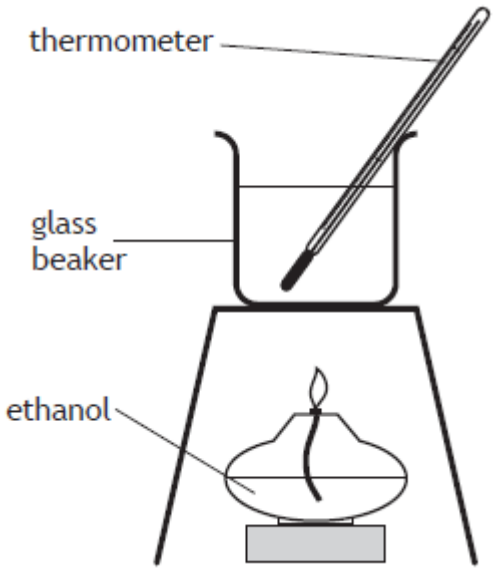

a. When 0.8 g of ethanol was burned, 8.36 kJ of energy was absorbed by the water.

If the temperature of the water increased by 40 °C, calculate the mass, in kg, of water used by the student in this experiment. (3)

You may wish to use the data booklet to help you.
Show your working clearly.

(questions continue on the next page)

b. The experiment was repeated, replacing the glass beaker with a copper can and using a heat shield.

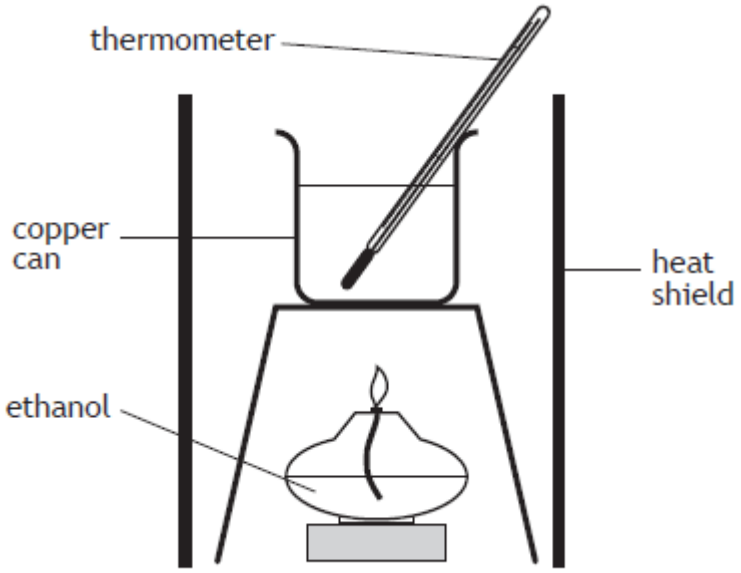

Explain why these changes resulted in more heat energy being absorbed by the water. (2)

Improvement	Explanation
Use of a copper can	
Use of a heat shield	

3. When frying food, it is recommended that the oil is heated before food is added.
The table gives information about olive oil used to fry food.

Specific heat capacity of olive oil	1.97 kJ kg^{-1} $°C^{-1}$
Initial temperature of olive oil	20 °C
Mass of olive oil heated	1500g

Calculate the energy, in kJ, required to increase the temperature of the olive oil to 180 °C. (3)

4. The energy released when an alcohol burns can be used to heat liquids other than water.

The data below was collected when the energy released, by burning an alcohols, was used to heat a sodium chloride solution.

Energy released when the alcohol was burned (kJ)	13.3
Initial temperature of sodium chloride solution (°C)	15
Final temperature of sodium chloride solution (°C)	49
Mass of sodium chloride solution heated (g)	100

Calculate the specific heat capacity, in kJ kg^{-1} $°C^{-1}$, of the sodium chloride solution.

You may wish to use the data booklet to help you. (3)

Show your working clearly.

Total: 12 marks